Fluid Automatic Control Solenoid Valve
water.air.steam. light oil Heavy oil. gas.vacuum.Corrosive fluid, etc

MIT-UNID-CNS www.unid.com.tw

■ Taoyuan company ■

TEL:886-3-3682323 FAX:886-3-3680977
No.7, Ruiyuan St., Bade Dist., Taoyuan City 334, Taiwan (R.O.C.)

■ Kaohsiung company ■

TEL:886-7-7328995~6 FAX:886-7-7328997
No.5-1, Fengren Rd., Renwu Dist., Kaohsiung City 814, Taiwan (R.O.C.)

Made in Taiwan

© copy right reserved. MIT-UNID-CNS

2015.09.1000

Fluid Automatic Control
Solenoid Valve

water.air.steam. light oil Heavy oil. gas.vacuum.Corrosive fluid, etc

IP67 ISO 9001

Index

● **Company Profile** 02

● **Solenoid Valve Profile** 04
- Product Introduction 05
- Product Features 05
- Electric apparatus Features 06
- Cautions 07
- Piping construction Indication 07
- Rubber ,Plastic Feature & Indication 08
- Rubber ,Plastic Feature & Indication table(1) 09
- Rubber ,Plastic Feature & Indication table(2) 10
- Coil Matching Table 11
- Coil Size Table 12

● **Solenoid Valve- Normally Closed Type** 13
- UD-6~15 14
- US-6~10 15
- UA-8~10 16
- UAO-8~15 17
- USS-15 18
- UPS-15~25 19
- UG-10~50 20
- UV-10~50 21
- UW-10~50 22
- UWF-10~50 23
- UAW-15~50 24
- US-15~50 25
- USF-15~50 26
- UDC-8~25 27
- UDC-8-TF~25-TF 28
- SUS-6~10 29
- SUW-15~50 30
- SUWF-15~50 31
- SUS-15~50 32
- SUSF-15~50 33
- SUW-80F 34
- SUS-80F 35
- UW-35F~100F 36
- US-35F~100F 37

● **Normally Closed Type-Optional Items** 39
- Direct-Acting type Diagram 40
- Multiplex, Pilot Operated Diaphragm Diagram 40
- Multiplex, Pilot Operated Piston Diagram 41
- Direct-Multiplex, Pilot Operated Piston Diagram 42
- Direct-Multiplex, Connected Diaphragm Diagram 42

● **Solenoid Valve- Normally Open Type** 43
- UD-6NO~10NO 44
- UW-10NO~50NO 45
- UPS-15NO~25NO 46
- SUS-6NO~10NO 47
- SUW-15NO~50NO 48
- SUS-15NO~50NO 49
- SUW-80FNO 50
- SUS-80FNO 51
- UW-35F-NO~100F-NO 52
- US-35F-NO~100F-NO 53

● **Normally Open Type-Optional Items** 54
- Multiplex, Pilot Operated Piston Diagram 56
- Multiplex, Pilot Operated Diaphragm Diagram 56
- Direct-Acting type Diagram 57
- Direct-Multiplex, Connected Diaphragm Diagram 57

● **Solenoid Valve-Explosion Proof Series** 58
- Solenoid Coil system 13 ATEX 60
- SKS-15~50 61
- SKW-15~50 62
- PKS-15~25 63
- PKW-10~50 64

● **Flow Rate Table** 65
- Flow Rate Table (1) 66
- Flow Rate Table (2) 67
- Flow Rate Table (3) 68

Company Profile

miT-UNiD®-cns

PRO UNI-D CO., LTD was founded in 1988, insisting in best quality, service and credit. We have kept investing in research and development, and currently production capacity ranks first in 2 port 2 way solenoid valve in Taiwan. Having customer from France, Spain and all over the world specify purchasing miT-UNID-cns Solenoid Valves. Solenoid Valve is very widely applicable, it can be used in industrial application, water treatment, air conditioning, chemical and other fluid automation. We have patents and certificates in a lot of countries, obtaining CE, CSA , ISO-9001 certified factory.

International Patent and Certificate

Patent Certificate

IP6X

CE

ISO9001

QUALITY · SERVICE · CREDIT

◎Best Service

Service

◎Best Quality

Quality

◎Best Credit

Credit

CSA

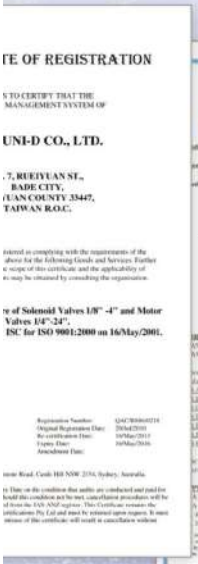

IPX7

Patent Certificate

Solenoid Valve Profile

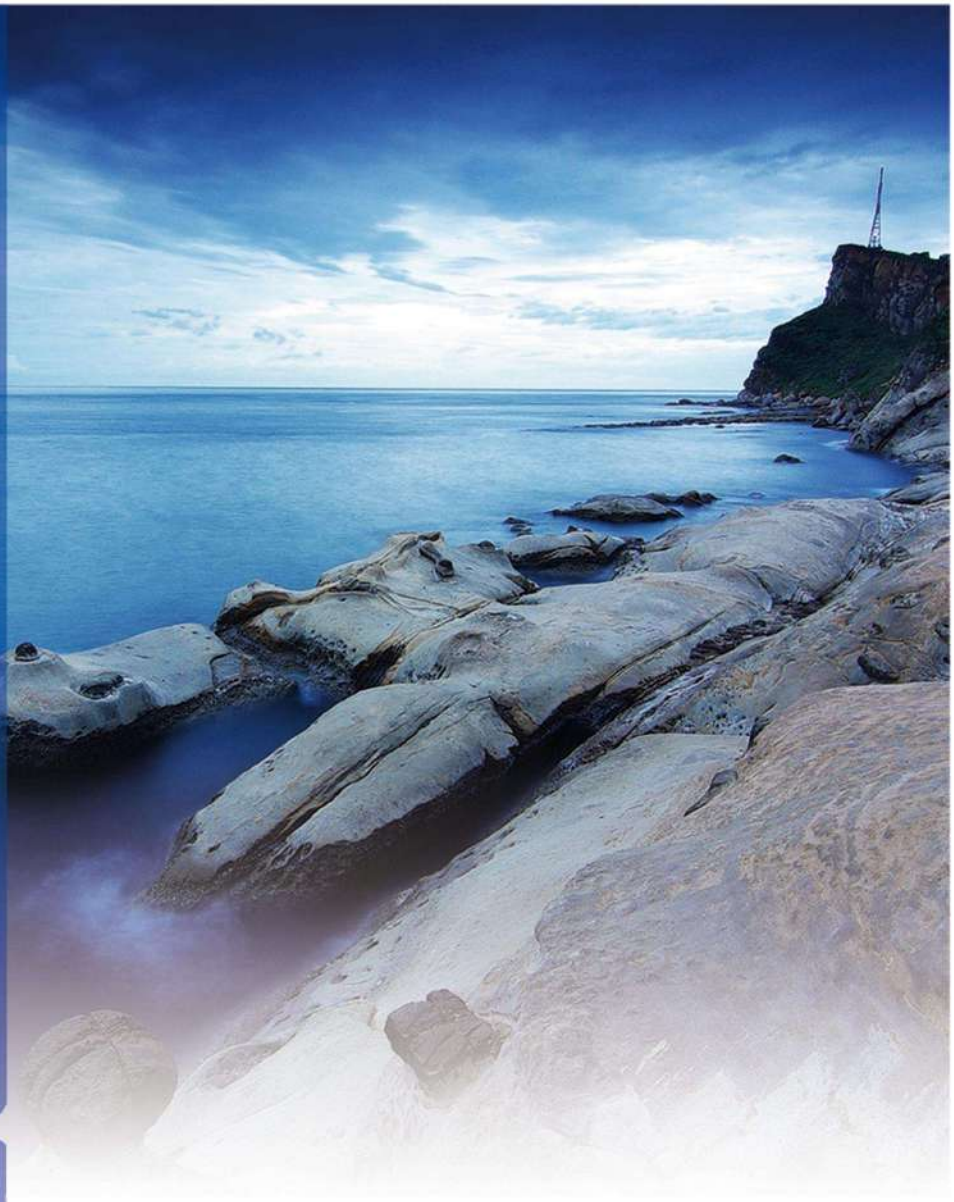

- Product Introduction
- Product Features
- Electric apparatus Features
- Cautions
- Rubber ,Plastic Feature & Indication
- Rubber ,Plastic Feature & Indication table(1)
- Rubber ,Plastic Feature & Indication table(2)
- Piping construction Indication
- Coil Matching Table
- Coil Size Table

Product Introduction

Solenoid Valve is a device that uses electromagnetic force to drive the core and to operate the valves. Before electrifying, the valve stays closed/open, and when electrifyed, the electromagnetic force will drive the core to make it open/ close. The solenoid valve is known for its fast operation movement, simple valve body structure, easy-operating and it's used mainly for cutting off, turning on or switching the flow direction automatically.

We offer 2 port 2 way, 3 port 2 way normally closed / normally open solenoid valve, with screwed end, flanged, wide optional specification rage, pipe diameter from 1/8 " to 4 ", explosion-proof solenoid valve , as for material: forged brass, cast bronze, cast iron, stainless steel, PVC and Teflon(PTFE) valve, wide fluid media rage such as: water, air, steam, gas, vacuum, light oil, heavy oil, acid/Alkaline-based fluid, etc.

Product Features

- Voltage Application：
  AC110V(50/60)Hz
  AC220V(50/60)Hz
  DC24V
  Other voltage such as DC12V、AC380V etc

- Operation Type：
  N/O-Normally Open
  N/C-Normally Closed

- Coil Type：
  Iron shell mold flying lead coil(standard coil)
  Waterproof flying lead coil
  Waterproof DIN coil
  NASS waterproof DIN coil (IP65)
  NASS explosion-proof coil(IP67)

- Pipe Thread Type：
  BSPT(PT)(standard)
  BSPP(PF)
  NPT

- Flanged Type：
  JIS 10K(standard)
  ANSI-150LB
  JIS-20K
  DIN-PN16

- Valve Material：
  Forged brass, Cast bronze
  Iron
  Stainless steel
  PVC
  Teflon(PTFE)

Electric apparatus Features

Please make sure the power supply is correct and the current must be greater than the current value ,see below table for reference.

Item	Power supply(V)	Current(A)	Item	Power supply(V)	Current(A)
UAW-15~50 US-15~50	DC24V	1.14	SUW-15NO~25NO UW-10NO~25NO UG-10NO~25NO UV-10NO~25NO	DC24V	1.15
	AC110V	0.44		AC110V	0.64
	AC220V	0.33		AC220V	0.65
UW-35~50 SUW-35~50	DC24V	1.13	UDC-20~25(TF) SUW-80F NO SUS-80F NO	DC24V	1.15
	AC110V	0.19		AC110V	0.64
	AC220V	0.1		AC220V	0.65
UW-10~25 UG-10~25 UV-10~25 UPS-10~25 SUW-10~25 SUS-10~50 UW-35F~100F US-35F~100F	DC24V	0.95	UW-35NO~50NO SUW-35NO~50NO	DC24V	1.05
	AC110V	0.19		AC110V	0.41
	AC220V	0.1		AC220V	0.25
UD-10(H) US-10 UA-10 SUS-10 UDC-8~15(TF) UAO-8~15	DC24V	0.75	UD-10NO UPS-15NO~25NO SUS-15NO~50NO UW-35F NO~100F NO US-35F NO~100F NO	DC24V	1.05
	AC110V	0.19		AC110V	0.27
	AC220V	0.1		AC220V	0.14
UD-6~8(H) UA-8 US-6~8 SUS-6~8	DC24V	0.66	UD-6NO~8NO US-6NO~8NO SUS-6NO~8NO	DC24V	0.74
	AC110V	0.11		AC110V	0.19
	AC220V	0.06		AC220V	0.15
SUW-80F SUS-80F	DC24V	1.14	USS-15	DC24V	0.8
	AC110V	0.53		AC110V	0.69
	AC220V	0.3		AC220V	0.11
UD-10(8mm) UD-15	DC24V	1.15			
	AC110V	0.69			
	AC220V	0.19			

Cautions

- Solenoid valves are intended to be used only within the technical characteristics (pressure, temperature,...etc.) as specified on the nameplate.
- Do not use in an explosive atmosphere and hazardous area, such as environment where corrosive gases, chemicals or salt water are present.
- Do not expose to direct sunlight. Use a suitable protective cover.
- Turn off electrical power supply and de-energize the electrical circuit and voltage carryirg parts before starting work.
- For waterproof coil (DIN PLUG), please install the outlet of connector downward to keep from dust and water (As diagram 1).
- It does not suggest to energize solenoid valves for a long time, because coil assembly will become hot. Any excessive heating will be indicated by smoking and/or odor of burning coil insulation.

Diagram 1

Piping installation instruction

- Before installation depressurize the piping system and clean internally.
- For the protection of the equipment install a strainer or filter suitable for the service involved in the inlet side as close to the solenoid valve as possible.
- Solenoid valves may cause liquid hammer when installed on liquid lines with high liquid velocities. If this occurs, it can be minimized by the use of larger pipes, (i.e.lower velocities) Commercially available shock absorbers may also be used to reduce the impact from liquid hammer toward pipes.
- The direction of flow is indicated by an ⇨ or the word **IN** on the inlet of the valve body.
- All standard solenoid valve MUST be mounted vertically upright to minimize wear and reduce the possibility of foreign matter accumulating insdie the sleeve as showed as diagram 1 as below.

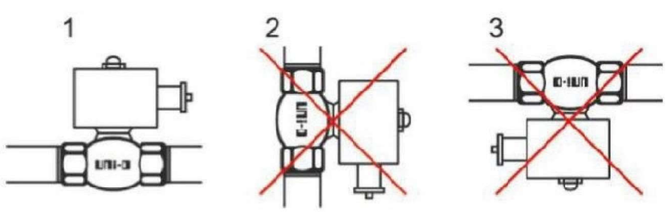

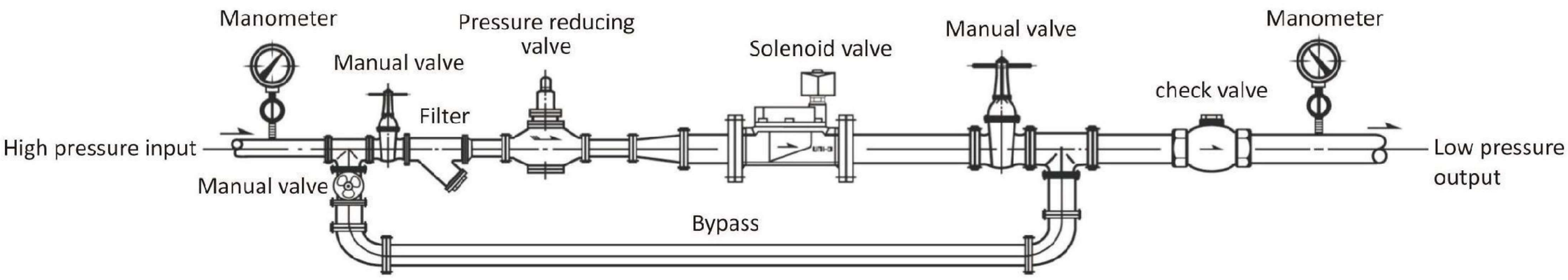

Example of installation

Rubber ,Plastic
Feature & Indication

Generic Name	Names	Features
NBR -5°c~80°C	Nitrile rubber	Oil resistance and abrasion resistance, often apply to seal materials, particularly resistant to mineral oil for the best. * Not suitable for using in polar solvents, such as ketones, ozone, nitro hydrocarbons, MEK and chloroform.
EPDM -5°c~130°C	Ethylene propylene rubber	Resistance to polar solvents (alcohols, ketones, ethylene glycol) of hydrochloric acid. With good ozone resistance, excellent water resistance and chemical resistance. * Not recommended for aromatic hydrogen.
Silicone -5°c~130°C	Silicone rubber	Excellent ozone ,oxides corrosion, and neutral solvent resistance * Not recommended for most concentrated solvents, oils, concentrated acid and dilution sodium hydroxide
VITON (FKM) (FPM) -5°c~130°C	Fluorocarbon rubber	Premium chemical resistance and higher price are the two characteristics, can be resistant to most oils and solvents * Not recommended for ketones, esters and mixtures containing nitrate
PTFE -5°c~185°C	Polytetrafluoroethylene Teflon	Able to withstand all the strong acid(including aqua regia) , strong oxidants, reducing agents and various organic solvents except alkali metal fluoride, sodium hydroxide medium It is better than rubber almost in all physical properties except elasticity and it has the characteristics of a low coefficient friction

*Please follow the recommended solenoid valve temperatures

Rubber ,Plastic Feature & Indication table(1)

Stability for various oil and solvent to rubber&plastic

Oil, solvents	Rubber types	NBR	SILICONE	EPDM	VITON	PTFE
Engine oil	SAE#30	◎	◎	×	◎	◎
	SAE 10w-#30	◎	○	×	◎	◎
Gear oil	For Vehicles	◎	△	×	○	◎
	Industrial second type (polarity) synthesis	◎	△	△	○	◎
Automation and control systems						
Brake oil	DOT3(ethanol)	△	○	○	×	◎
	DOT5(ethanol)	△	○	○	×	◎
	DOT5(Silicon-based)	◎	×	×	◎	◎
Second type turbine oil						
Machine oil (the 2nd axis lubricants)		○	×	×	◎	◎
Hydraulic operating oil (mineral oil-based)		◎	△	×	◎	◎
Flame retardant hydraulic oil	Phosphate ester	×	◎	×	△	◎
	Water + diethanol Department	○	△	×	△	◎
Consumers cut oil		△	◎	×	◎	◎
Lubricating oil	Mineral oil-based	◎	◎	×	◎	◎
	Silicon-based	◎	×	○	◎	◎
	Fluorine	◎	◎	×	×	◎
Refrigerant	R12+Paraffinic	△	×	×	×	◎
	R134a+Glycol	△	×	◎	×	◎
Gasoline, diesel oil		△	×	×	◎	◎
Light oil, kerosene		△	×	×	◎	◎
Heavy oil		△	×	×	◎	◎
Antifreeze (in ene glycol system)		○	△	◎	×	◎
Warm water		◎	◎	◎	○	◎
Sea water		△	×	◎	○	◎
Steam		×	○	◎	△	◎
Hydrochloric acid solution		△	○	◎	○	◎
30% Sulfuric acid solution		×	×	○	△	◎
10%Nitric acid solution		×	×	○	△	◎
40% Sodium hydroxide solution		△	×	◎	×	◎
Benzene		×	×	×	×	◎
Alcohol		△	○	◎	○	◎
Butanone		×	△	×	×	◎

◎:Outstanding ○: Resistant, unless otherwise specified △:Have no resistance ,Unless otherwise specified ×:Have no resistance

Rubber ,Plastic Feature & Indication table(2)

Stability for various Chemical liquid to rubber&plastic

Oil, solvents	Rubber types	NBR	SILICONE	EPDM	VITON	PTFE
	Steam(150℃)	×	○	◎	△	◎
Organic acids	Acetic acid	△	◎	◎	○	◎
Inorganic acid	Hydrochloric acid solution	△	◎	◎	○	◎
	Sulfuric acid solution		○	◎	◎	◎
	Nitric acid solution	×	○	○	△	◎
Alkalies	Sodium hydroxide	△	○	◎	○	◎
	Ammonium hydroxide	△	◎	◎	○	◎
Salt	Sodium chloride	△	◎	◎	◎	◎
	Sodium carbonate	△	◎	◎	○	◎
Oxidizing agent	Sydrogen peroxide	△	◎	○	◎	◎
	Sodium hypochlorite	×	○	○	◎	◎
Aliphatic carbohydrates	Trimethylpentane	△	×	×	◎	◎
Aromatic carbohydrates	Methylbenzene	△	△	×	◎	◎
Chlorination of carbohydrates	Trichloro ethylene	△	×	×	◎	◎
Alcohols	Methyl alcohol	△	◎	◎	△	◎
	Ethyl alcohol	△	◎	◎	◎	◎
Ethers	Diethyl ether	△	×	△	×	◎
Esters	Ethyl acetate	×	×	○	△	◎
Ketone	Chloromethyl ethyl ketone	×	×	◎	×	◎
Aldehydes	Furfuraldehyde	△	×	◎	×	◎
Amine	Triethanolamine	△	×	◎	×	◎
	Carbon disulfide	△	-	×	◎	◎

◎:Outstanding ○: Resistant, unless otherwise specified △:have no resistance ,Unless otherwise specified x:have no resistance

Coil Matching Table

Type	L Type	S Type	S Type water-proof coils
Applicable items	USS-15 UD-15 UD-10(8mm)	UA-8 UD-6~8(H) UD-6 NO~8 NO SUS-6 NO~8NO	UA-8 US-6~8 SUS-6~8 UD-6~8(H)

Type	M Type	M Type waterproof coil (flying lead)	DIN 43650 waterproof coil
Applicable items	UA-10 US-10 UD-10(H) (NO) SUS-10 UAO-8~15 UDC-8~15(TF) UW(F)-10~50(NO) UV-10~50 UG-10~50 SUW(F)-10~50(NO) UPS(F)-15(NO)~25(NO) SUS(F)-15(NO)~50(NO) UW-35F~100F(NO) US-35F~100F(NO)	UA-10 US-10 UD-10(H) (NO) SUS-10 UAO-8~15 UDC-8~15(TF) UW(F)-10~50(NO) UV-10~50 UG-10~50 SUW(F)-10~50(NO) UPS(F)-15(NO)~25(NO) SUS(F)-15(NO)~50(NO) UW-35F~100F(NO) US-35F~100F(NO)	UA-10 US-10 UD-10(H) (NO) SUS-10 UAO-8~15 UDC-8~15(TF) UW(F)-10~50(NO) UV-10~50 UG-10~50 SUW(F)-10~50(NO) UPS(F)-15(NO)~25(NO) SUS(F)-15(NO)~50(NO) UW-35F~100F(NO) US-35F~100F(NO)

Type	XL Type	NASS DIN 43650 waterproof coil
Applicable items	UAW-15~50 US-15~50 UDC(TF)-20~25 SUW-80F(NO) SUS-80F(NO)	UD-10 SUS-10 UW(F)-10~25 UG-10~25 UV-10~25 SUW(F)-10~25 UPS(F)-10~25 SUS(F)-15~50 NW-35~50

Type	NASS(Ⓔx II 2 G Ex e mb IIC T4 Gb) NASS Explosion-proof Coils	NASS(EEx mII T4) NASS Explosion-proof Coils
Applicable items	PKS-15~25 SKS-15~25 PKW-10~50 SKW-15~25	PKS-15~25 SKS-15~25 PKW-10~50 SKW-15~25

Coil Size Matching Table

Category	XL Type				L Type				M Type			
Dimension (mm)	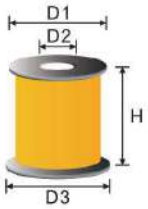				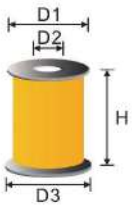				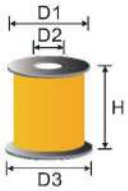			
	D1	D2	D3	H	D1	D2	D3	H	D1	D2	D3	H
	Ø60.7	Ø23	Ø63.2	53.1	Ø42.3	Ø16.6	Ø44.4	42.1	Ø42.5	Ø16.5	Ø44.4	34.4

Category	S Type				S Type waterproof coil			M Type waterproof coil			
Dimension (mm)					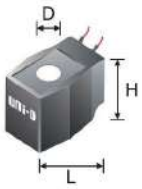			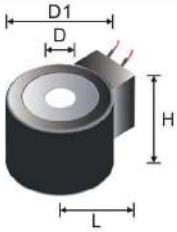			
	D1	D2	D3	H	D	L	H	D	D1	L	H
	Ø37.3	Ø14.2	Ø37.5	29.2	Ø14.1	50.5	32.4	Ø16.3	Ø56	69.3	38.2

Category	NASS DIN 43650 waterproof coil					NASS DIN 43650 waterproof coil		
Dimension (mm)	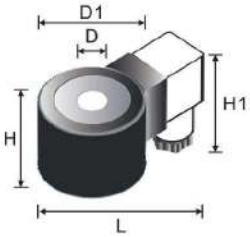					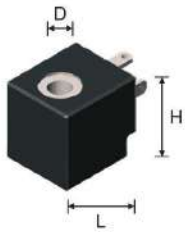		
	D	D1	L	H	H1	D	L	H
	Ø16.3	Ø56	97	38.2	52	Ø14.8	57	42.3

Category	NASS(Ⓔx II 2 G Ex e mb IIC T4 Gb)Explosion-proof Coil				
	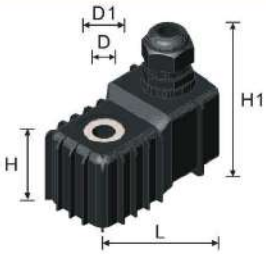				
	D	D1	L	H	H1
	Ø10.0	Ø14.8	82.3	45.2	92

Solenoid Valve- Normally Closed Type

- UD-6~15
- US-6~10
- UA-8~10
- UAO-8~15
- USS-15
- UPS-15~25
- UG-10~50
- UV-10~50
- UW-10~50
- UWF-10~50
- UAW-15~50
- US-15~50
- USF-15~50
- UDC-8~25
- UDC-8-TF~25-TF
- SUS-6~10
- SUW-15~50
- SUWF-15~50
- SUS-15~50
- SUSF-15~50
- SUW-80F
- SUS-80F
- UW-35F~100F
- US-35F~100F

UD-6~15

UD - 6 □ - □ - □ - AC110 - □

MODEL

Pipe Size
6 : 1/8"
8 : 1/4"
10 : 3/8"
15 : 1/2"

Operating Pressure
□ : Standard
H : High pressure

Coil
□ : Standard coil
D : Waterproof DIN COIL (under 130°C)
N : NASS DIN COIL (under 130°C)
I : Waterproof COIL 2 wire type (under 130°C)

Operating Fluid
□ : Standard (water, air)
G : Gas
LO : Light oil
VA : Vacuum

Voltage
AC220V(50/60)Hz
AC110V(50/60)Hz
DC24V

Thread
□ : Standard (BSPT or PT)
BSP: BSPP or PF
NPT: NPT

NC

PRODUCT DESCRIPTION

- UD series is direct-acting, conductive, and normally closed (NC) 2/2 way solenoid valve.
- Able to be operated directly without pressure
- Availability of fluid type: water, air, light oil, gas, vacuum
- Acceptable for customization: Viton (130°C) , Silicone (130°C) and EPDM (130°C, not available for UD-15)

CAUTIONS:

- Before pipelining, the pipe line must be very clean without any contaminants or any other things not ought to be existed.
- To prolong the life time of the product, Y-line filter should be installed in the front end of solenoid valve.
- AC voltage tolerance: ± 10%; DC voltage tolerance: ± 1%
- It should be installed horizontally; vertical installation is not advisable.

Not Suitalbe For Fluid As Below:

- Liquid status when it is high temperature; solid status when it is cool.
- Corrosive fluid
- Viscosity over 20cst

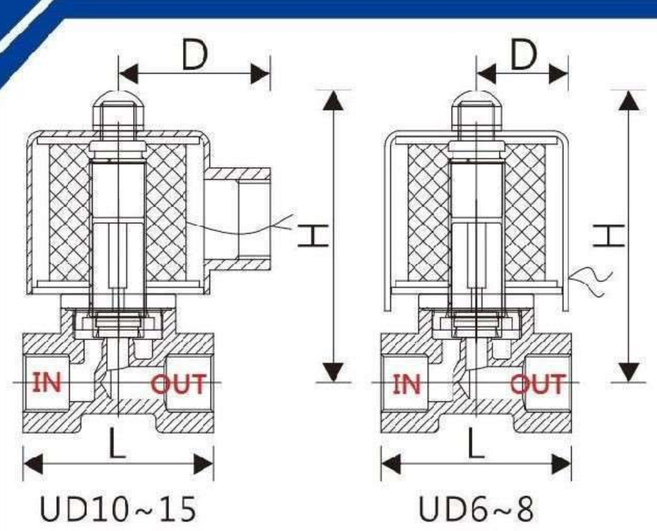

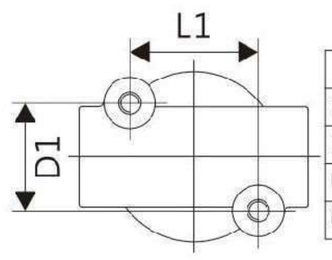

	L1	D1	M
UD-6	23	19.3	M4x0.7
UD-8	23	19.3	M4x0.7
UD-10	20	21	M5x0.8
UD-15	20	21	M5x0.8

MATERIAL:

PARTS	Coil	Tube	Spring	Core	Plug	O-ring	Valve body
MATERIAL	Special copper wire (H class)	Stainless steel	Stainless steel	Stainless steel	NBR (Viton, Silicone)	NBR	Brass

SPECIFICATION

MODEL	Waterproof DIN/flying lead Coil	NASS DIN Coil (IP65)	PIPE SIZE	CV	ORIFICE	FLUID TEMP. (°C)	Operating Pressure kgf / cm² (bar)					Vacuum (Torr)	Dimension (mm)			Weight (kg)
							Water	Air	Steam	Light oil	Gas		L	H	D	
UD-6	●		1/8"	0.23	2.5mm	-5°C ~ +80°C	0~7	0~7		0~7	0~7	$0\sim10^{-3}$	41	66	21.5	0.32
UD-8	●		1/4"	0.23	2.5mm	-5°C ~ +80°C	0~7	0~7		0~7	0~7	$0\sim10^{-3}$	41	66	21.5	0.31
UD-8	●		1/4"	0.58	4mm	-5°C ~ +80°C	0~3	0~3		0~3	0~3	$0\sim10^{-3}$	41	66	21.5	0.31
UD-8			1/4"	0.79	6mm	-5°C ~ +80°C	0~1	0~1		0~1	0~1	$0\sim10^{-3}$	41	66	21.5	0.31
UD-8H			1/4"	0.18	1.2mm	-5°C ~ +130°C	0~20	0~20		0~20	0~20	$0\sim10^{-3}$	41	66	21.5	0.31
UD-10	●	●	3/8"	0.58	4mm	-5°C ~ +80°C	0~10	0~10		0~10	0~10	$0\sim10^{-3}$	53	75	48	0.53
UD-10			3/8"	0.79	8mm	-5°C ~ +80°C	0~3	0~3		0~3	0~3	$0\sim10^{-3}$	53	90	48	0.65
UD-10H	●		3/8"	0.45	2mm	-5°C ~ +130°C	0~20	0~20		0~20	0~20	$0\sim10^{-3}$	53	75	48	0.54
UD-15			1/2"	0.58	8mm	-5°C ~ +80°C	0~3	0~5		0~3	0~5	$0\sim10^{-3}$	53	90	48	0.64

US-6~10

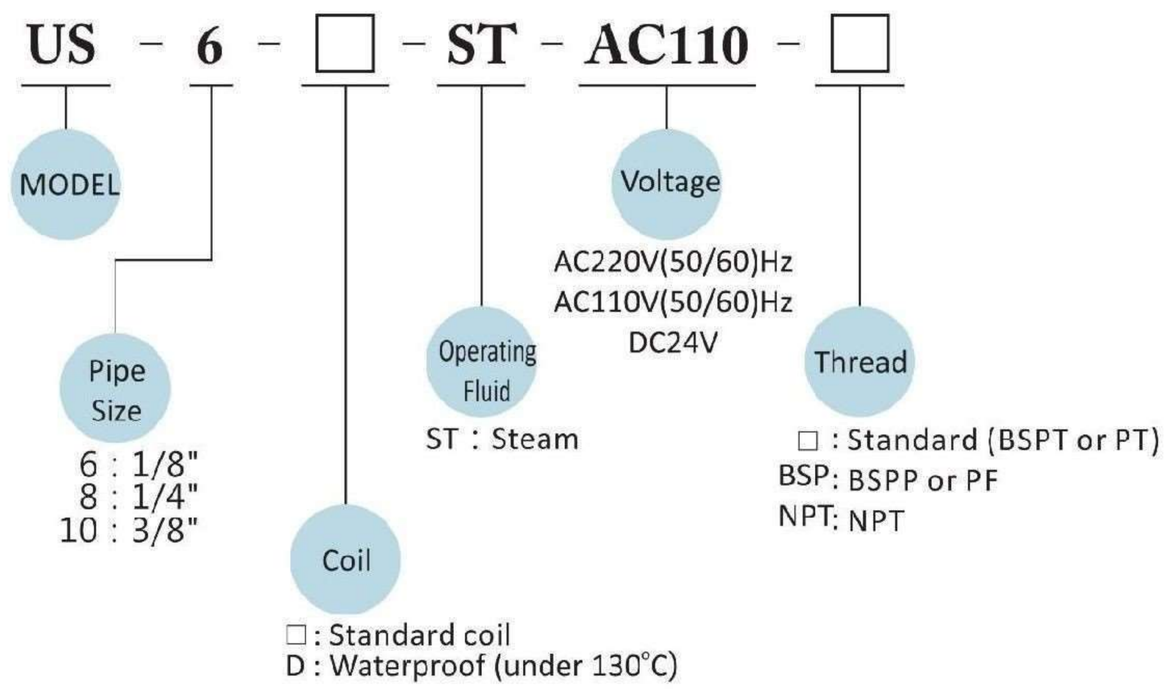

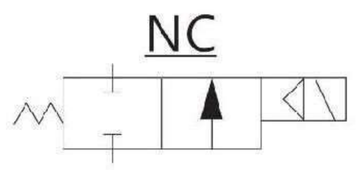

UD Series

PRODUCT DESCRIPTION

- US series is direct-acting, conductive, and normally closed (NC) 2/2 way solenoid valve.
- Able to be operated directly without pressure
- Material PTFE is suitable for steam.

CAUTIONS:

- Before pipelining, the pipe line must be very clean without any contaminants or any other things not ought to be existed.
- To prolong the life time of the product, Y-line filter should be installed in the front end of solenoid valve.
- The temperature of steam should not over 185℃
- AC voltage tolerance: ± 10%; DC voltage tolerance: ± 1%
- It should be installed horizontally; vertical installation is not advisable.

Not Suitalbe For Fluid As Below:

- Liquid status when it is high temperature; solid status when it is cool.
- Corrosive fluid
- Viscosity over 20cst

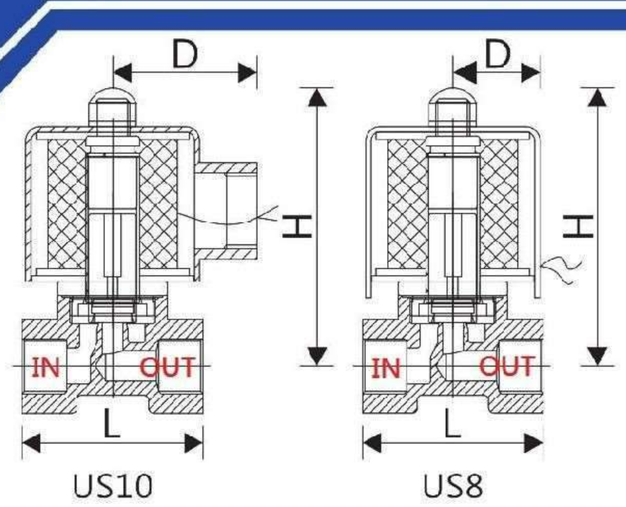

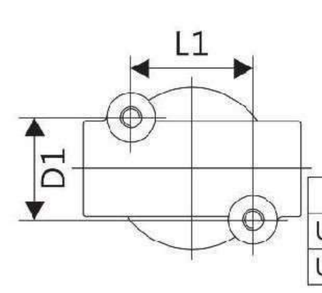

	L1	D1	M
US-8	23	19.3	M4x0.7
US-10	20	21	M5x0.8

MATERIAL:

PARTS	Coil	Tube	Spring	Core	Plug	O-ring	Valve body
MATERIAL	Special copper wire (H class)	Stainless steel	Stainless steel	Stainless steel	PTFE	PTFE	BRASS

SPECIFICATION

MODEL	Waterproof DIN/flying lead Coil	NASS DIN Coil (IP65)	PIPE SIZE	CV	ORIFICE	FLUID TEMP. (°C)	Operating Pressure kgf / cm² (bar)					Vacuum (Torr)	Dimension (mm)			Weight (kg)
							Water	Air	Steam	Light oil	Gas		L	H	D	
US-6	●		1/8"	0.23	2.5mm	-5℃ ~ +185℃			0~7	0~7			41	66	21.5	0.32
US-8	●		1/4"	0.23	2.5mm	-5℃ ~ +185℃			0~7	0~7			41	66	21.5	0.32
US-10	●		3/8"	0.23	4.0mm	-5℃ ~ +185℃			0~10	0~10			53	75	48	0.54

UA-8~10

UA - 8 - □ - □ - AC110 - □

- **UA** — MODEL
- **8** — Pipe Size
  - 8 : 1/4"
  - 10 : 3/8"
- **□** — Coil
  - □ : Standard coi
  - D : Waterproof DIN COIL (under 130°C)
  - I : Waterproof COIL 2 wire type (under 130°C)
- **□** — Operating Fluid
  - □ : Standard (water, air)
  - VA : vacuum
- **AC110** — Voltage
  - AC220V(50/60)HZ
  - AC110V(50/60)HZ
  - DC24V
- **□** — Thread
  - □ : Standard (BSPT or PT)
  - BSP: BSPP or PF
  - NPT: NPT

NC

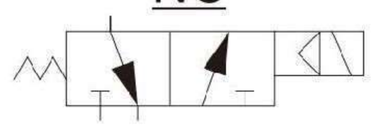

PRODUCT DESCRIPTION

- UA series is direct-acting, conductive, and normally closed (NC) 3/2 way solenoid valve.
- Availability of fluid type: water, air , vacuum
- Able to be operated directly without pressure
- Applicable for exhausting facility, ex: Air cylinder after power-off
- Acceptable for customization- Viton (130℃) plug

CAUTIONS:

- Before pipelining, the pipe line must be very clean without any contaminants or any other things not ought to be existed.
- To prolong the life time of the product, Y-line filter should be installed in the front end of solenoid valve.
- AC voltage tolerance: ± 10%; DC voltage tolerance: ± 1%
- It should be installed horizontally; vertical installation is not advisable.

Not Suitalbe For Fluid As Below:

- Liquid status when it is high temperature; solid status when it is cool.
- Corrosive fluid
- Viscosity over 20cst

MATERIAL:

PARTS	Coil	Tube	Spring	Core	Plug	O-ring	Valve body
MATERIAL	Special copper wire (H class)	Stainless steel	Stainless steel	Stainless steel	NBR (Viton, Silicone, PTFE)	NBR (PTFE)	Brass

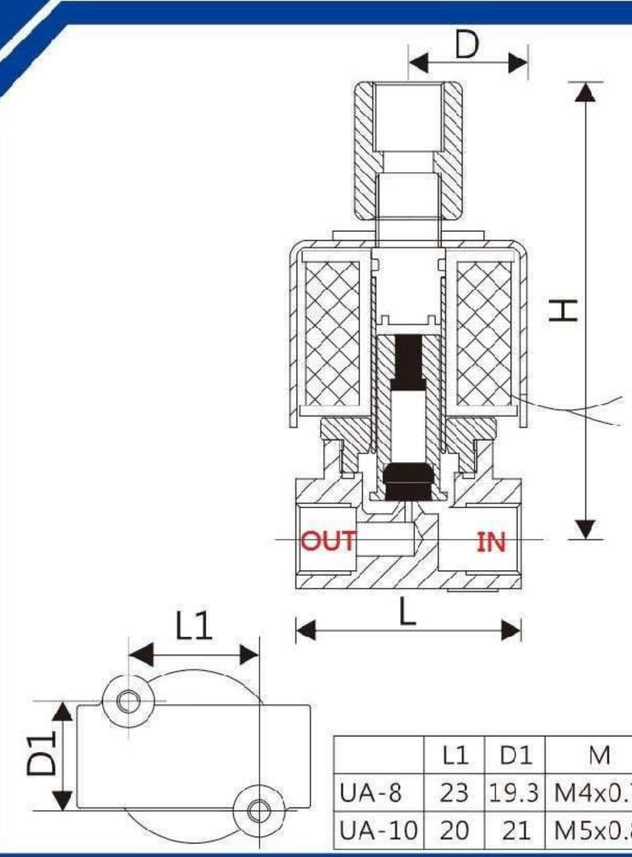

	L1	D1	M
UA-8	23	19.3	M4x0.7
UA-10	20	21	M5x0.8

SPECIFICATION

MODEL	Waterproof DIN/flying lead Coil	NASS DIN Coil (IP65)	PIPE SIZE	CV	ORIFICE	FLUID TEMP. (°C)	Operating Pressure kgf / cm² (bar)					Vacuum (Torr)	Dimension (mm)			Weight (kg)
							Water	Air	Steam	Light oil	Gas		L	H	D	
UA-8	●		1/4"	0.1	1.2mm	-5°C ~ +80°C	0~10	0~10				$0\sim10^{-3}$	41	87	21.5	0.38
UA-10	●		3/8"	0.12	1.5mm	-5°C ~ +80°C	0~10	0~10				$0\sim10^{-3}$	53	93	48	0.57

UAO-8~15

UAO - 8 - □ - □ - AC110 - □

- **UAO** — MODEL
- **8** — Pipe Size
  - 8 : 1/4"
  - 10 : 3/8"
  - 15 : 1/2"
- **□** — Coil
  - □ : Standard coi
  - D : Waterproof DIN COIL (under 130°C)
  - I : Waterproof COIL 2 wire type (under 130°C)
- **□** — Operating Fluid
  - □ : Standard (water, air)
  - HO: Heavy oil
- **AC110** — Voltage
  - AC220V(50/60)HZ
  - AC110V(50/60)HZ
  - DC24V
- **□** — Thread
  - □ : Standard (BSPT or PT)
  - BSP: BSPP or PF
  - NPT: NPT

NC

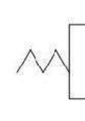

PRODUCT DESCRIPTION

- UAO series is multiplex, pilot operated piston, conductive, and normally closed (NC) 2/2 way solenoid valve.
- Availability of fluid type: water, air, heavy oil
- Specially suitable for frequent operation
- Applicable for sand blasting equipment and high-pressured air and oil injection system.

CAUTIONS:

- Minimum pressure to open: over 0.5kgf-cm^2
- Before pipelining, the pipe line must be very clean without any contaminants or any other things not ought to be existed.
- To prolong the life time of the product, Y-line filter should be installed in the front end of solenoid valve.
- AC voltage tolerance: ± 10%; DC voltage tolerance: ± 1%
- It should be installed horizontally; vertical installation is not advisable.

Not Suitalbe For Fluid As Below:

- Liquid status when it is high temperature; solid status when it is cool.
- Corrosive fluid
- Viscosity over 50cst

MATERIAL:

PARTS	Coil	Tube	Spring	Core	Plug	Piston	Piston plug	Valve body
MATERIAL	Special copper wire (H class)	Stainless steel	Stainless steel	Stainless steel	NBR VITON	Brass	NBR	Brass

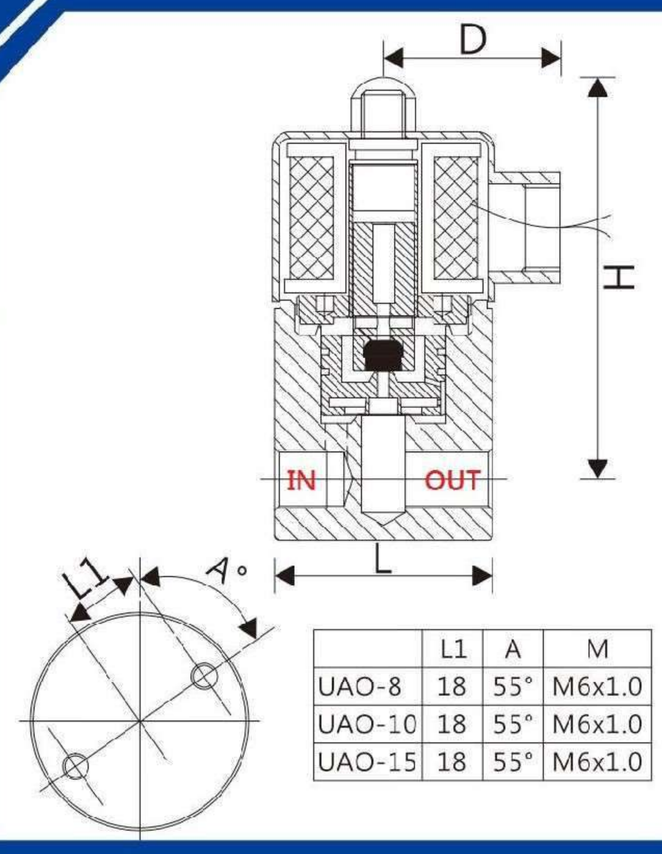

	L1	A	M
UAO-8	18	55°	M6x1.0
UAO-10	18	55°	M6x1.0
UAO-15	18	55°	M6x1.0

SPECIFICATION

MODEL	Waterproof DIN/flying lead Coil	NASS DIN Coil (IP65)	PIPE SIZE	CV	ORIFICE	FLUID TEMP. (°C)	Operating Pressure kgf / cm^2 (bar)					Dimension (mm)			Weight (kg)
							Water	Air	Steam	Llight oil	Gas	L	H	D	
UAO-8	●		1/4"	2.5	10mm	-5°C ~ +80°C	0.5~15	0.5~15		0.5~15		50	95	48	1.13
UAO-10	●		3/8"	2.5	10mm	-5°C ~ +80°C	0.5~15	0.5~15		0.5~15		50	95	48	1.1
UAO-15	●		1/2"	2.5	10mm	-5°C ~ +80°C	0.5~15	0.5~15		0.5~15		54	100	48	1.23

USS-15

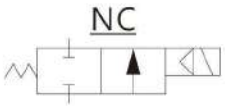

USS - 15 - □ - □ - AC110 - □

- **USS** — MODEL
- **15** — Pipe Size: 15 : 1/2"
- **□** — Coil: □ : Standard coil
- **□** — Operating Fluid: □ : Standard (s team); LO : Light oil; W : Water, air
- **AC110** — Voltage: AC220V(50/60)HZ, AC110V(50/60)HZ, DC24V
- **□** — Thread: □ : Standard (BSPT or PT); BSP: BSPP or PF; NPT: NPT

PRODUCT DESCRIPTION

- USS series is direct-acting, pilot operated piston, conductive, and normally closed (NC) 2/2 way solenoid valve.
- Specially suitable for frequent operation
- Availability of fluid type: water, air, steam, light oil

CAUTIONS:

- Before pipelining, the pipe line must be very clean without any contaminants or any other things not ought to be existed.
- To prolong the life time of the product, Y-line filter should be installed in the front end of solenoid valve.
- The temperature of steam should not over 185℃
- AC voltage tolerance: ± 10%; DC voltage tolerance: ± 1%
- It should be installed horizontally; vertical installation is not advisable.

Not Suitalbe For Fluid As Below:

- Liquid status when it is high temperature; solid status when it is cool.
- Corrosive fluid
- Viscosity over 50cst

MATERIAL:

PARTS	Coil	Tube	Spring	Core	Plug	Piston	Piston plug	Valve body
MATERIAL	Special copper wire (H class)	Stainless steel	Stainless steel	Stainless steel	PTFE	Brass	PTFE	Cast Bronze

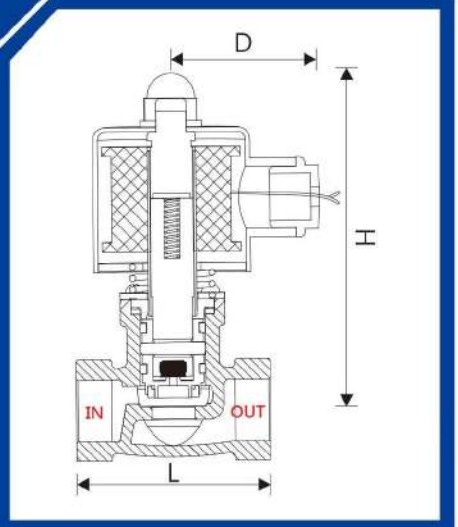

SPECIFICATION

AC

MODEL	Waterproof DIN/flying lead Coil	NASS DIN Coil (IP65)	PIPE SIZE	CV	ORIFICE	FLUID TEMP. (℃)	Operating Pressure kgf / cm² (bar)					Dimension (mm)			Weight (kg)
							Water	Air	Steam	Light oil	Gas	L	H	D	
USS-15			1/2"	3	14mm	-5℃ ~ +185℃	0~8	0~10	0~10	0~7		63	108	48	0.83

DC

MODEL	Waterproof DIN/flying lead Coil	NASS DIN Coil (IP65)	PIPE SIZE	CV	ORIFICE	FLUID TEMP. (℃)	Operating Pressure kgf / cm² (bar)					Dimension (mm)			Weight (kg)
							Water	Air	Steam	Light oil	Gas	L	H	D	
USS-15			1/2"	3	14mm	-5℃ ~ +185℃	0~5	0~7	0~7	0~5		63	108	48	0.83

UPS-15~25

UPS - 15 - □ - □ - AC110 - □

- **UPS** – MODEL
- **15** – Pipe Size
  - 15 : 1/2"
  - 20 : 3/4"
  - 25 : 1"
- **□** – Coil
  - □ : Standard coil
  - D : Waterproof DIN COIL (under 130°C)
  - N : NASS DIN COIL (under 130°C)
  - I : Waterproof COIL 2 wire type (under 130°C)
- **□** – Operating Fluid
  - □ : Standard (steam)
  - LO : Light oil
  - W : Water, air
- **AC110** – Voltage
  - AC220V(50/60)HZ
  - AC110V(50/60)HZ
  - DC24V
- **□** – Thread
  - □ : Standard (BSPT or PT)
  - BSP: BSPP or PF
  - NPT: NPT

NC

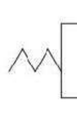

PRODUCT DESCRIPTION

- UPS series is multiplex, pilot operated piston, conductive and normally closed (NC) 2/2 way solenoid valve.
- Specially suitable for frequent operation
- Availability of fluid type: water, air, steam, light oil
- Acceptable for customization Viton , Silicone and EPDM plug

CAUTIONS:

- Minimum pressure to open: over 0.5kgf-cm^2
- Before pipelining, the pipe line must be very clean without any contaminants or any other things not ought to be existed.
- To prolong the life time of the product, Y-line filter should be installed in the front end of solenoid valve.
- AC voltage tolerance: ± 10%; DC voltage tolerance: ± 1%
- It should be installed horizontally; vertical installation is not advisable.

Not Suitalbe For Fluid As Below:

- Liquid status when it is high temperature; solid status when it is cool.
- Corrosive fluid
- Viscosity over 20 cst

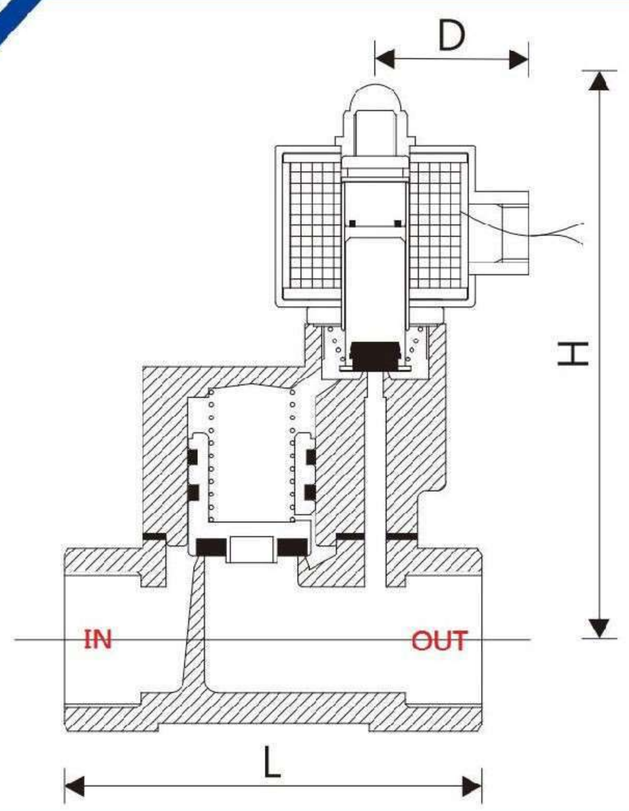

MATERIAL:

PARTS	Coil	Tube	Spring	Core	Plug	Piston Spring	Piston	Piston plug	Valve body
MATERIAL	Special copper wire (H class)	Stainless steel	Stainless steel	Stainless steel	PTFE	Stainless steel	Brass	PTFE	Cast Bronze

SPECIFICATION

MODEL	Waterproof DIN/flying lead Coil	NASS DIN Coil (IP65)	PIPE SIZE	CV	ORIFICE	FLUID TEMP. (°C)	Operating Pressure kgf / cm^2 (bar)					Dimension (mm)			Weight (kg)
							Water	Air	Steam	Light oil	Gas	L	H	D	
UPS-15	●	●	1/2"	4.0	17mm	-5°C ~ +185°C	0.5~10	0.5~10	0.5~10	0.5~10		82	118	48	1.32
UPS-20	●	●	3/4"	6.0	17mm	-5°C ~ +185°C	0.5~10	0.5~10	0.5~10	0.5~10		82	120	48	1.44
UPS-25	●	●	1"	12	22mm	-5°C ~ +185°C	0.5~10	0.5~10	0.5~10	0.5~10		100	135	48	2.13

UG-10~50

UG - 10 - □ - G - AC110 - □

- **UG** — MODEL
- **10** — Pipe Size
  - 10 : 3/8"
  - 15 : 1/2"
  - 20 : 3/4"
  - 25 : 1"
  - 35 : 1 1/4"
  - 40 : 1 1/2"
  - 50 : 2"
- **□** — Coil
  - □ : Standard coil
  - D : Waterproof DIN COIL (under 130°C)
  - N : NASS DIN COIL (under 130°C)
  - I : Waterproof COIL 2 wire type (under 130°C)
- **G** — Operating Fluid
  - G: gas
- **AC110** — Voltage
  - AC220V(50/60)HZ
  - AC110V(50/60)HZ
  - DC24V
- **□** — Thread
  - □ : Standard (BSPT or PT)
  - BSP: BSPP or PF
  - NPT: NPT

NC

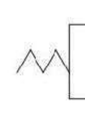

PRODUCT DESCRIPTION

- UG series is direct, multiplex, connected diaphragm, conductive and normally closed (NC) 2/2 way solenoid valve.
- Able to be operated directly without pressure
- Availability of fluid type: gas

CAUTIONS:

- Before pipelining, the pipe line must be very clean without any contaminants or any other things not ought to be existed.
- To prolong the life time of the product, Y-line filter should be installed in the front end of solenoid valve.
- AC voltage tolerance: ± 10%; DC voltage tolerance: ± 1%
- It should be installed horizontally; vertical installation is not advisable.

Not Suitalbe For Fluid As Below:

- Liquid status when it is high temperature; solid status when it is cool.
- Corrosive fluid
- Viscosity over 20cst

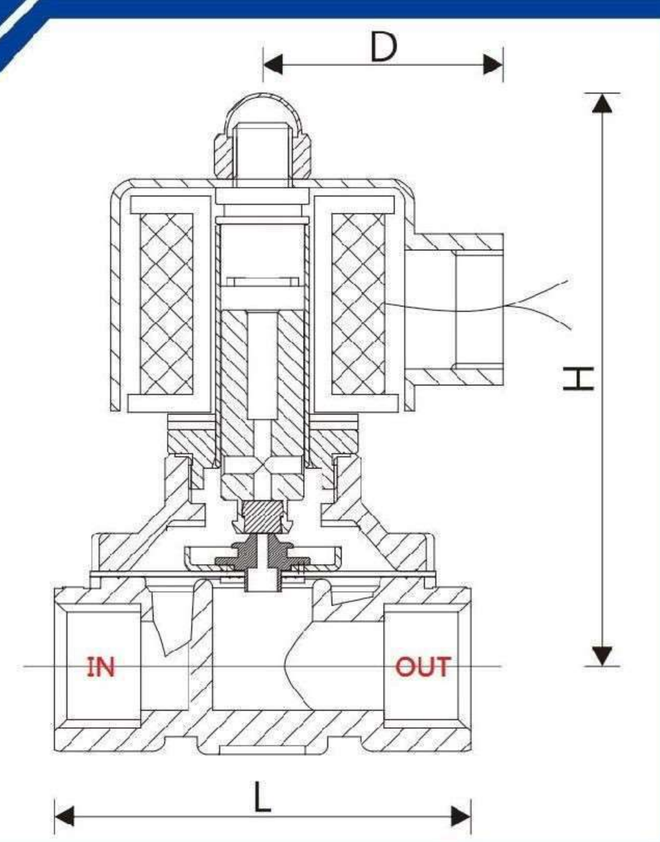

MATERIAL:

PARTS	Coil	Tube	Spring	Core	Plug	Diaphragm	Valve body
MATERIAL	Special copper wire (H class)	Stainless steel	Stainless steel	Stainless steel	NBR	NBR	Brass

SPECIFICATION

MODEL	Waterproof DIN/flying lead Coil	NASS DIN Coil (IP65)	PIPE SIZE	CV	ORIFICE	FLUID TEMP. (°C)	Operating Pressure kgf / cm² (bar)					Dimension (mm)			Weight (kg)
							Water	Air	Wteam	Light oil	Gas	L	H	D	
UG-10	●	●	3/8"	4.5	15mm	-5°C ~ +80°C					0~7	70	100	48	1.01
UG-15	●	●	1/2"	4.5	15mm	-5°C ~ +80°C					0~7	70	100	48	1
UG-20	●	●	3/4"	8.6	20mm	-5°C ~ +80°C					0~7	73	102	48	1.13
UG-25	●	●	1"	12	25mm	-5°C ~ +80°C					0~7	100	112	48	1.7
UG-35	●	●	1 1/4"	24	35mm	-5°C ~ +80°C					0~7	125	113	48	2.32
UG-40	●	●	1 1/2"	28	40mm	-5°C ~ +80°C					0~7	125	118	48	2.53
UG-50	●	●	2"	48	50mm	-5°C ~ +80°C					0~7	167	125	48	4.32

UV-10~50

UV - 10 - □ - VA - AC110 - □

MODEL

Pipe Size

10 : 3/8"
15 : 1/2"
20 : 3/4"
25 : 1"
35 : 1 1/4"
40 : 1 1/2"
50 : 2"

Coil

□ : Standard coil
D : Waterproof DIN COIL (under 130°C)
N : NASS DIN COIL (under 130°C)
I : Waterproof COIL 2 wire type (under 130°C)

Operating Fluid

Operating Fluid:
VA: Vacuum

Voltage

AC220V(50/60)HZ
AC110V(50/60)HZ
DC24V

Thread

□ : Standard (BSPT or PT)
BSP: BSPP or PF
NPT: NPT

NC

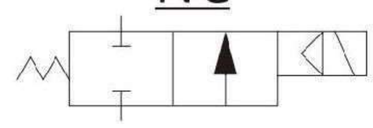

UD Series

PRODUCT DESCRIPTION

- UV series is direct, multiplex, connected diaphragm, conductive and normally closed (NC) 2/2 way solenoid valve.
- Able to be operated directly without pressure
- Availability of fluid type: vacuum

CAUTIONS:

- Before pipelining, the pipe line must be very clean without any contaminants or any other things not ought to be existed.
- To prolong the life time of the product, Y-line filter should be installed in the front end of solenoid valve.
- AC voltage tolerance: ± 10%; DC voltage tolerance: ± 1%
- It should be installed horizontally; vertical installation is not advisable.

Not Suitalbe For Fluid As Below:

- Liquid status when it is high temperature; solid status when it is cool.
- Corrosive fluid
- Viscosity over 20cst

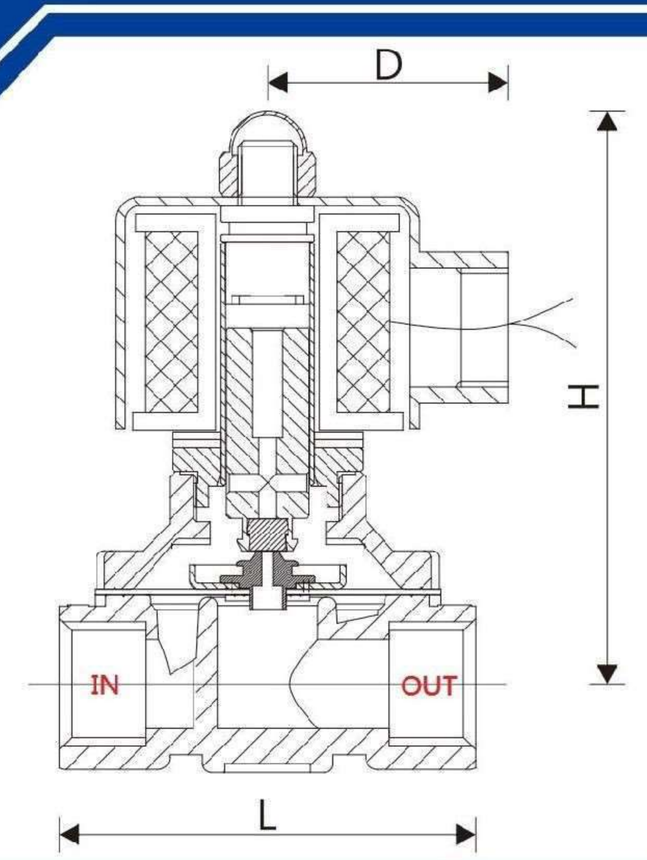

MATERIAL:

PARTS	Coil	Tube	Spring	Core	Plug	Diaphragm	Valve body
MATERIAL	Special copper wire (H class)	Stainless steel	Stainless steel	Stainless steel	NBR	NBR	Brass

SPECIFICATION

MODEL	Waterproof DIN/flying lead Coil	NASS DIN Coil (IP65)	PIPE SIZE	CV	ORIFICE	FLUID TEMP. (°C)	Operating Pressure kgf / cm² (bar)					Vacuum (Torr)	Dimension (mm)			Weight (kg)
							Water	Air	Steam	Light oil	Gas		L	H	D	
UV-10	●	●	3/8"	4.5	15mm	-5°C ~ +80°C						$0\sim10^{-3}$	70	100	48	1.01
UV-15	●	●	1/2"	4.5	15mm	-5°C ~ +80°C						$0\sim10^{-3}$	70	100	48	1
UV-20	●	●	3/4"	8.6	20mm	-5°C ~ +80°C						$0\sim10^{-3}$	73	102	48	1.13
UV-25	●	●	1"	12	25mm	-5°C ~ +80°C						$0\sim10^{-3}$	100	112	48	1.7
UV-35	●	●	1 1/4"	24	35mm	-5°C ~ +80°C						$0\sim10^{-3}$	125	113	48	2.32
UV-40	●	●	1 1/2"	28	40mm	-5°C ~ +80°C						$0\sim10^{-3}$	125	118	48	2.53
UV-50	●	●	2"	48	50mm	-5°C ~ +80°C						$0\sim10^{-3}$	167	125	48	4.32

UW-10~50

UW - 10 - □ - □ - AC110 - □

MODEL

Pipe Size

10 : 3/8"
15 : 1/2"
20 : 3/4"
25 : 1"
35 : 1 1/4"
40 : 1 1/2"
50 : 2"

Coil

□ : Standard coil
D : Waterproof DIN COIL (under 130°C)
N : NASS DIN COIL (under 130°C)
I : Waterproof COIL 2 wire type (under 130°C)

Operating Fluid

□ : Standard (water, air)
LO : Light oil

Voltage

AC220V(50/60)HZ
AC110V(50/60)HZ
DC24V

Thread

□ : Standard (BSPT or PT)
BSP: BSPP or PF
NPT: NPT

NC

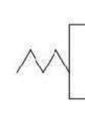

PRODUCT DESCRIPTION

- UW series is direct, multiplex, connected diaphragm, conductive and normally closed (NC) 2/2 way solenoid valve.
- Able to be operated directly under low pressure
- Availability of fluid type: water, air, light oil
- Acceptable for customization Viton (130℃) , Silicone (130℃) and EPDM (130℃, only available for UW-20~UW-25)

CAUTIONS:

- Before pipelining, the pipe line must be very clean without any contaminants or any other things not ought to be existed.
- To prolong the life time of the product, Y-line filter should be installed in the front end of solenoid valve.
- AC voltage tolerance: ± 10%; DC voltage tolerance: ± 1%
- It should be installed horizontally; vertical installation is not advisable.

Not Suitalbe For Fluid As Below:

- Liquid status when it is high temperature; solid status when it is cool.
- Corrosive fluid
- Viscosity over 20cst

MATERIAL:

PARTS	Coil	Tube	Spring	Core	Plug	Diaphragm	Valve body
MATERIAL	Special copper wire (H class)	Stainless steel	Stainless steel	Stainless steel	NBR	NBR	Brass

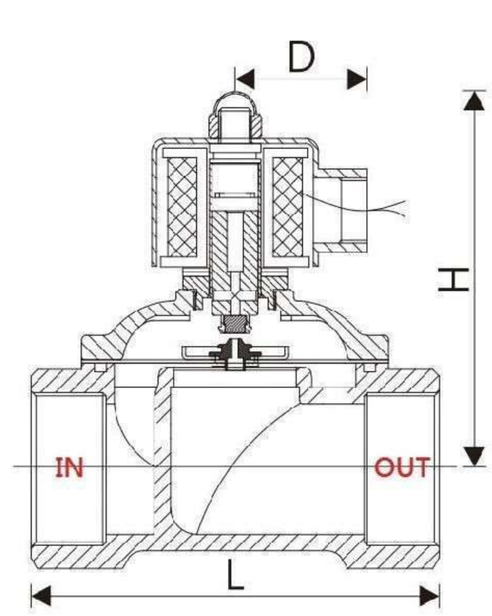

SPECIFICATION

MODEL	Waterproof DIN/flying lead Coil	NASS DIN Coil (IP65)	PIPE SIZE	CV	ORIFICE	FLUID TEMP. (°C)	Operating Pressure kgf / cm² (bar)			High Pressure Type		Dimension (mm)			Weight (kg)
							Water	Air	Light oil	Water	Air	L	H	D	
UW-10	●	●	3/8"	4.5	15mm	-5°C ~ +80°C	0~5	0~7	0~5	0.5~10	0.5~20	70	100	48	1.01
UW-15	●	●	1/2"	4.5	15mm	-5°C ~ +80°C	0~5	0~7	0~5	0.5~10	0.5~20	70	100	48	1
UW-20	●	●	3/4"	8.6	20mm	-5°C ~ +80°C	0~5	0~7	0~5	0.5~10	0.5~20	73	107	48	1.14
UW-25	●	●	1"	12	25mm	-5°C ~ +80°C	0~5	0~7	0~5	0.5~10	0.5~20	100	112	48	1.7
UW-35	●	●	1 1/4"	24	35mm	-5°C ~ +80°C	0~5	0~7	0~5	0.5~10	0.5~20	125	113	48	2.32
UW-40	●	●	1 1/2"	28	40mm	-5°C ~ +80°C	0~5	0~7	0~5	0.5~10	0.5~20	125	118	48	2.53
UW-50	●	●	2"	48	50mm	-5°C ~ +80°C	0~5	0~7	0~5	0.5~10	0.5~20	167	125	48	4.32

● High Pressure Type Use N/O Coil

UWF-10~50

UWF- 10 - □ - □ - AC110 - □

MODEL

Pipe Size
10 : 3/8"
15 : 1/2"
20 : 3/4"
25 : 1"
35 : 1 1/4"
40 : 1 1/2"
50 : 2"

Coil
□ : Standard coil
D : Waterproof DIN COIL (under 130°C)
N : NASS DIN COIL (under 130°C)
I : Waterproof COIL 2 wire type (under 130°C)

Operating Fluid
□ : Standard (water, air)
LO : Light oil

Voltage
AC220V(50/60)Hz
AC110V(50/60)Hz
DC24V

Flange End
□ : Standard (JIS 10K)
ANSI 150LB
PN 16

NC

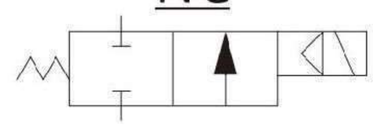

UD Series

PRODUCT DESCRIPTION

- UWF series is direct, multiplex, connected diaphragm, conductive and normally closed (NC) 2/2 way solenoid valve.
- Able to be operated directly under low pressure
- Availability of fluid type: water, air, light oil
- Acceptable for customization Viton (130℃) , Silicone (130℃) and EPDM (130℃, only available for UW-20~UW-25)

CAUTIONS:

- Before pipelining, the pipe line must be very clean without any contaminants or any other things not ought to be existed.
- To prolong the life time of the product, Y-line filter should be installed in the front end of solenoid valve.
- AC voltage tolerance: ± 10%; DC voltage tolerance: ± 1%
- It should be installed horizontally; vertical installation is not advisable.

Not Suitalbe For Fluid As Below:

- Liquid status when it is high temperature; solid status when it is cool.
- Corrosive fluid
- Viscosity over 20cst

MATERIAL:

PARTS	Coil	Tube	Spring	Core	Plug	Diaphragm	Valve body
MATERIAL	Special copper wire (H class)	Stainless steel	Stainless steel	Stainless steel	NBR	NBR	Brass

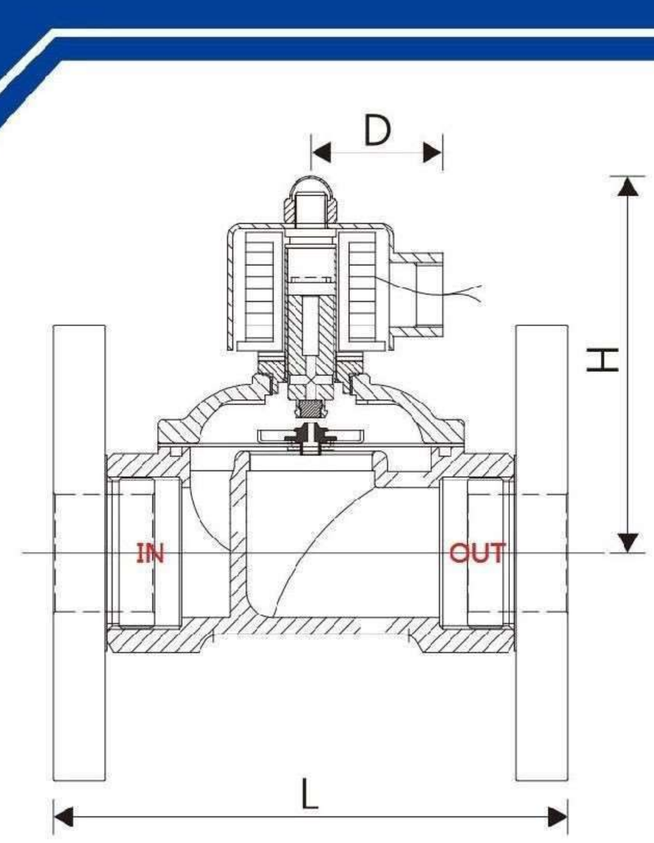

SPECIFICATION

MODEL	Waterproof DIN/flying lead Coil	NASS DIN Coil (IP65)	PIPE SIZE	CV	ORIFICE	FLUID TEMP. (°C)	Operating Pressure kgf / cm² (bar)			High Pressure Type		Dimension (mm)			Weight (kg)
							Water	Air	Light oil	Water	Air	L	H	D	
UWF-10	●	●	3/8"	2.4	15mm	-5°C ~ +80°C	0~5	0~7	0~5	0.5~10	0.5~20	100	100	48	2.12
UWF-15	●	●	1/2"	4.5	15mm	-5°C ~ +80°C	0~5	0~7	0~5	0.5~10	0.5~20	110	100	48	2.12
UWF-20	●	●	3/4"	8.6	20mm	-5°C ~ +80°C	0~5	0~7	0~5	0.5~10	0.5~20	110	107	48	2.63
UWF-25	●	●	1"	12	25mm	-5°C ~ +80°C	0~5	0~7	0~5	0.5~10	0.5~20	150	112	48	4.1
UWF-35	●	●	1 1/4"	24	35mm	-5°C ~ +80°C	0~5	0~7	0~5	0.5~10	0.5~20	170	113	48	5.9
UWF-40	●	●	1 1/2"	28	40mm	-5°C ~ +80°C	0~5	0~7	0~5	0.5~10	0.5~20	170	118	48	6.4
UWF-50	●	●	2"	48	50mm	-5°C ~ +80°C	0~5	0~7	0~5	0.5~10	0.5~20	210	125	48	9.2

● High Pressure Type Use N/O Coil

UAW-15~50

UAW - 15 - □ - AC110 - □

- **UAW** – MODEL
- **15** – Pipe Size
  - 15 : 1/2"
  - 20 : 3/4"
  - 25 : 1"
  - 35 : 1 1/4"
  - 40 : 1 1/2"
  - 50 : 2"
- **□** – Operating Fluid: Water, Air
- **AC110** – Voltage: AC220V(50/60)Hz, AC110V(50/60)Hz, DC24V
- **□** – Thread
  - □ : Standard (BSPT or PT)
  - BSP: BSPP or PF
  - NPT: NPT

NC

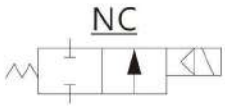

PRODUCT DESCRIPTION

- UAW series is multiplex, pilot operated piston, conductive and normally closed (NC) 2/2 way solenoid valve.
- Availability of fluid type: water, air

CAUTIONS:

- Minimum pressure to open: over 0.5~1kgf-cm^2
- Before pipelining, the pipe line must be very clean without any contaminants or any other things not ought to be existed.
- To prolong the life time of the product, Y-line filter should be installed in the front end of solenoid valve.
- AC voltage tolerance: ± 10%; DC voltage tolerance: ± 1%
- It should be installed horizontally; vertical installation is not advisable.

Not Suitalbe For Fluid As Below:

- Liquid status when it is high temperature; solid status when it is cool.
- Corrosive fluid
- Viscosity over 50 cst

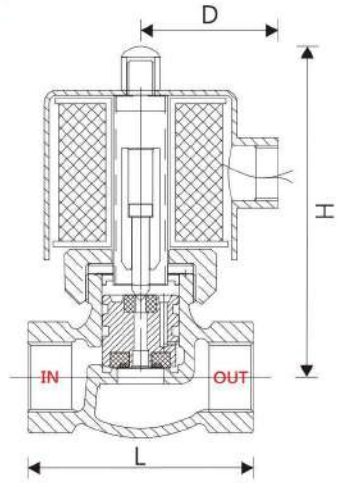

MATERIAL:

PARTS	Coil	Tube	Spring	Core	Plug	Piston	Piston plug	Valve body
MATERIAL	Special copper wire (H class)	Stainless steel	Stainless steel	Stainless steel	PTFE +15%GF	Brass	NBR	Cast Bronze

SPECIFICATION

MODEL	Waterproof DIN/flying lead Coil	NASS DIN Coil (IP65)	PIPE SIZE	CV	ORIFICE	FLUID TEMP. (°C)	Operating Pressure kgf / cm^2 (bar)					Dimension (mm)			Weight (kg)
							Water	Air	Steam	Light oil	Gas	L	H	D	
UAW-15			1/2"	4.0	17mm	-5°C ~ +80°C	0.5~10	0.5~15				82	125	58	1.6
UAW-20			3/4"	6.0	17mm	-5°C ~ +80°C	0.5~10	0.5~15				82	125	58	1.67
UAW-25			1"	12	22mm	-5°C ~ +80°C	0.5~10	0.5~15				91	133	58	2.02
UAW-35			1 1/4"	18	30mm	-5°C ~ +80°C	1~10	1~15				111	141	58	3.08
UAW-40			1 1/2"	22	30mm	-5°C ~ +80°C	1~10	1~15				111	144	58	3.1
UAW-50			2"	48	50mm	-5°C ~ +80°C	1~10	1~15				163	175	58	6.82

US-15~50

US - 15 - □ - AC110 - □

- **US** – MODEL
- **15** – Pipe Size
  - 15 : 1/2"
  - 20 : 3/4"
  - 25 : 1"
  - 35 : 1 1/4"
  - 40 : 1 1/2"
  - 50 : 2"
- **□** – Operating Fluid
  - □ : Standard (steam)
  - LO : Light oil
  - HO : Heavy oil
- **AC110** – Voltage
  - AC220V(50/60)Hz
  - AC110V(50/60)Hz
  - DC24V
- **□** – Thread
  - □ : Standard (BSPT or PT)
  - BSP: BSPP or PF
  - NPT: NPT

NC

PRODUCT DESCRIPTION

- US series is multiplex, pilot operated piston, conductive and normally closed (NC) 2/2 way solenoid valve.
- Availability of fluid type: steam, heavy oil, Light oil

CAUTIONS:

- Minimum pressure to open: over 0.5~1kgf-cm^2
- Before pipelining, the pipe line must be very clean without any contaminants or any other things not ought to be existed.
- To prolong the life time of the product, Y-line filter should be installed in the front end of solenoid valve.
- AC voltage tolerance: ± 10%; DC voltage tolerance: ± 1%
- It should be installed horizontally; vertical installation is not advisable.

Not Suitalbe For Fluid As Below:

- Liquid status when it is high temperature; solid status when it is cool.
- Corrosive fluid
- Viscosity over 20 cst

MATERIAL:

PARTS	Coil	Tube	Spring	Core	Plug	Piston plug	Valve body
MATERIAL	Special copper wire (H class)	Stainless steel	Stainless steel	Stainless steel	PTFE +15%GF	PTFE	Cast Bronze

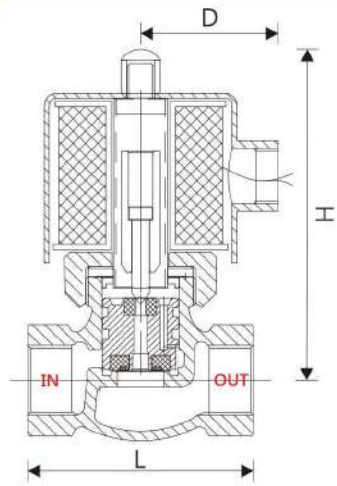

SPECIFICATION

MODEL	Waterproof DIN/flying lead Coil	NASS DIN Coil (IP65)	PIPE SIZE	CV	ORIFICE	FLUID TEMP. (℃)	Operating Pressure kgf / cm^2 (bar)					Dimension (mm)			Weight (kg)
							Water	Air	Steam	heavy oil	Gas	L	H	D	
US-15			1/2"	4.0	17mm	-5℃ ~ +185℃			0.5~10	0.5~10		82	125	58	1.6
US-20			3/4"	6.0	17mm	-5℃ ~ +185℃			0.5~10	0.5~10		82	125	58	1.67
US-25			1"	12	22mm	-5℃ ~ +185℃			0.5~10	0.5~10		91	133	58	2.02
US-35			1 1/4"	18	30mm	-5℃ ~ +185℃			1~10	1~10		111	141	58	3.08
US-40			1 1/2"	22	30mm	-5℃ ~ +185℃			1~10	1~10		111	144	58	3.1
US-50			2"	48	50mm	-5℃ ~ +185℃			1~10	1~10		163	175	58	6.82

USF-15~50

USF - 15 - □ - AC110 - □

- **USF** — MODEL
- **15** — Pipe Size
  - 15 : 1/2"
  - 20 : 3/4"
  - 25 : 1"
  - 35 : 1 1/4"
  - 40 : 1 1/2"
  - 50 : 2"
- **□** — Operating Fluid
  - □ : Standard (steam)
  - LO : Light oil
  - HO : Heavy oil
- **AC110** — Voltage
  - AC220V(50/60)Hz
  - AC110V(50/60)Hz
  - DC24V
- **□** — Flange End
  - □ : Standard (JIS 10K)
  - ANSI 150LB
  - PN 16

NC

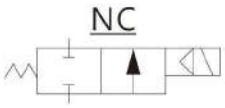

PRODUCT DESCRIPTION

- USF series is multiplex, pilot operated piston, conductive and normally closed (NC) 2/2 way solenoid valve.
- Availability of fluid type: steam, heavy oil, Light oil

CAUTIONS:

- Minimum pressure to open: over 0.5~1kgf-cm^2
- Before pipelining, the pipe line must be very clean without any contaminants or any other things not ought to be existed.
- To prolong the life time of the product, Y-line filter should be installed in the front end of solenoid valve.
- AC voltage tolerance: ± 10%; DC voltage tolerance: ± 1%
- It should be installed horizontally; vertical installation is not advisable.

Not Suitalbe For Fluid As Below:

- Liquid status when it is high temperature; solid status when it is cool.
- Corrosive fluid
- Viscosity over 20 cst

MATERIAL:

PARTS	Coil	Tube	Spring	Core	Plug	Piston	Piston plug	Valve body
MATERIAL	Special copper wire (H class)	Stainless steel	Stainless steel	Stainless steel	PTFE +15%GF	Brass	PTFE	Cast Bronze

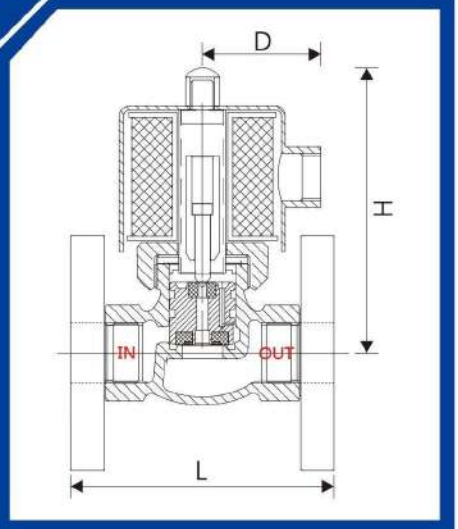

SPECIFICATION

MODEL	Waterproof DIN/flying lead Coil	NASS DIN Coil (IP65)	PIPE SIZE	CV	ORIFICE	FLUID TEMP. (°C)	Operating Pressure kgf / cm^2 (bar)					Dimension (mm)			Weight (kg)
							Water	Air	Steam	heavy oil	Gas	L	H	D	
USF-15			1/2"	4.0	17mm	-5°C ~ +185°C			0.5~10	0.5~10		110	125	58	2.8
USF-20			3/4"	6.0	17mm	-5°C ~ +185°C			0.5~10	0.5~10		110	125	58	3.2
USF-25			1"	12	22mm	-5°C ~ +185°C			0.5~10	0.5~10		120	133	58	4.4
USF-35			1 1/4"	18	30mm	-5°C ~ +185°C			1~10	1~10		140	141	58	6.3
USF-40			1 1/2"	22	30mm	-5°C ~ +185°C			1~10	1~10		140	144	58	6.5
USF-50			2"	48	50mm	-5°C ~ +185°C			1~10	1~10		195	175	58	10.9

UDC-8~25

UDC - 8 - □ - □ - AC110 - □

MODEL

Pipe Size
8 : 1/4"
10 : 3/8"
15 : 1/2"
20 : 3/4"
25 : 1"

Coil
□ : Standard coi
D : Waterproof DIN COIL (under 130°C)
I : Waterproof COIL 2 wire type (under 130°C)

Operating Fluid
Corrosive fluid

Voltage
AC220V(50/60)Hz
AC110V(50/60)Hz
DC24V

Thread
□ : Standard (BSPT or PT)
BSP: BSPP or PF
NPT: NPT

NC

PRODUCT DESCRIPTION

- UDC series is direct-acting, conductive and normally closed (NC) 2/2 way solenoid valve.
- Able to be operated directly without pressure
- Availability of fluid type: water, air
- PVC valve body is corrosion-resistant (pH 3~11)

CAUTIONS:

- Before pipelining, the pipe line must be very clean without any contaminants or any other things not ought to be existed.
- To prolong the life time of the product, Y-line filter should be installed in the front end of solenoid valve.
- Do not use for frequent operation
- AC voltage tolerance: ± 10%; DC voltage tolerance: ± 1%
- It should be installed horizontally; vertical installation is not advisable.

Not Suitalbe For Fluid As Below:

- Liquid status when it is high temperature; solid status when it is cool.
- Viscosity over 20 cst

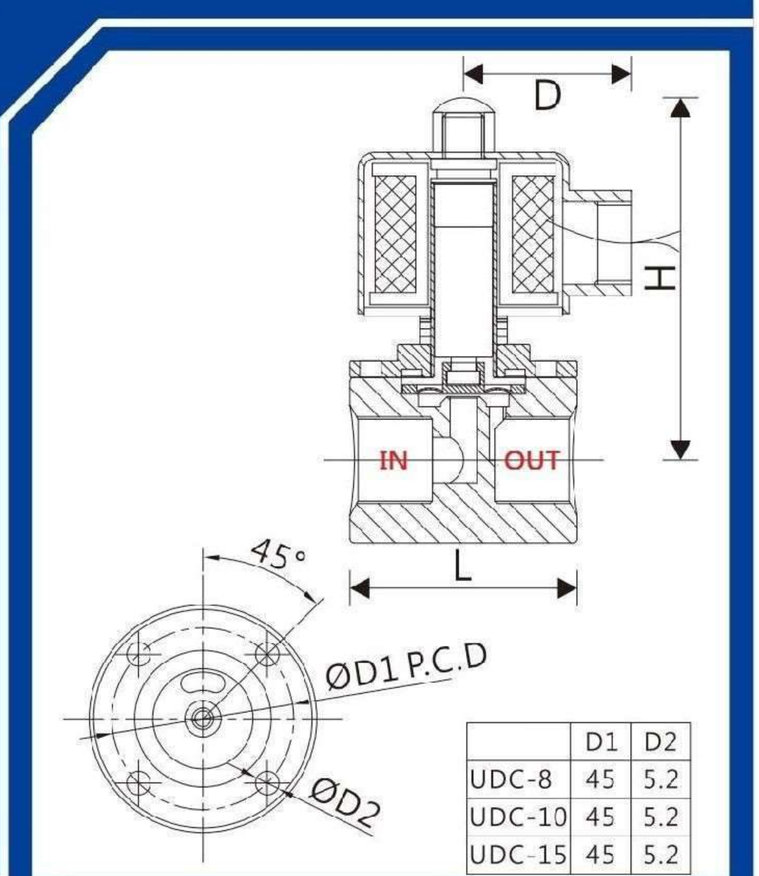

	D1	D2
UDC-8	45	5.2
UDC-10	45	5.2
UDC-15	45	5.2

MATERIAL:

PARTS	Coil	Tube	Spring	Core	Oring	Diaphragm	Valve body
MATERIAL	Special copper wire (H)	Stainless steel	Stainless steel	Stainless steel	Synthetic rubber	NBR (PTFE coating)	PVC

SPECIFICATION

MODEL	Waterproof DIN/flying lead Coil	NASS DIN Coil (IP65)	PIPE SIZE	CV	ORIFICE	FLUID TEMP. (°C)	Operating Pressure kgf / cm² (bar)					Vacuum (Torr)	Dimension (mm)			Weight (kg)
							Water	Air	Steam	Light oil	Gas		L	H	D	
UDC-8	●		1/4"	0.28	6.5mm	-5°C ~ +80°C	0~1	0~1					50	90	48	0.53
UDC-10	●		3/8"	0.28	6.5mm	-5°C ~ +80°C	0~1	0~1					50	90	48	0.52
UDC-15	●		1/2"	0.28	6.5mm	-5°C ~ +80°C	0~1	0~1					55	93	48	0.58
UDC-20			3/4"	3.5	10mm	-5°C ~ +80°C	0~0.5	0~0.5					76	119	58	1.84
UDC-25			1"	3.5	10mm	-5°C ~ +80°C	0~0.5	0~0.5					76	119	58	1.8

UDC-8-TF~25-TF

UDC - 8 - TF - □ - □ - AC110 - □

MODEL

Pipe Size
8 : 1/4"
10 : 3/8"
15 : 1/2"
20 : 3/4"
25 : 1"

Coil
□ : Standard coi
D : Waterproof DIN COIL (under 130°C)
I : Waterproof COIL 2 wire type (under 130°C)

Operating Fluid
Corrosive fluid

Voltage
AC220V(50/60)HZ
AC110V(50/60)HZ
DC24V

Thread
□ : Standard (BSPT or PT)
BSP: BSPP or PF
NPT: NPT

NC

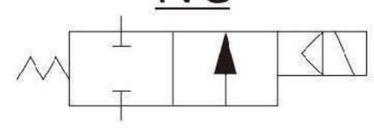

PRODUCT DESCRIPTION

- UDC-TF series is direct-acting, conductive and normally closed (NC) 2/2 way solenoid valve.
- Able to be operated directly without pressure
- Availability of fluid type: water, air
- PTFE valve body is corrosion-resistant (pH 0~14)

CAUTIONS:

- Before pipelining, the pipe line must be very clean without any contaminants or any other things not ought to be existed.
- To prolong the life time of the product, Y-line filter should be installed in the front end of solenoid valve.
- Do not use for frequent operation
- AC voltage tolerance: ± 10%; DC voltage tolerance: ± 1%
- It should be installed horizontally; vertical installation is not advisable.

Not Suitalbe For Fluid As Below:

- Liquid status when it is high temperature; solid status when it is cool.
- Viscosity over 20 cst

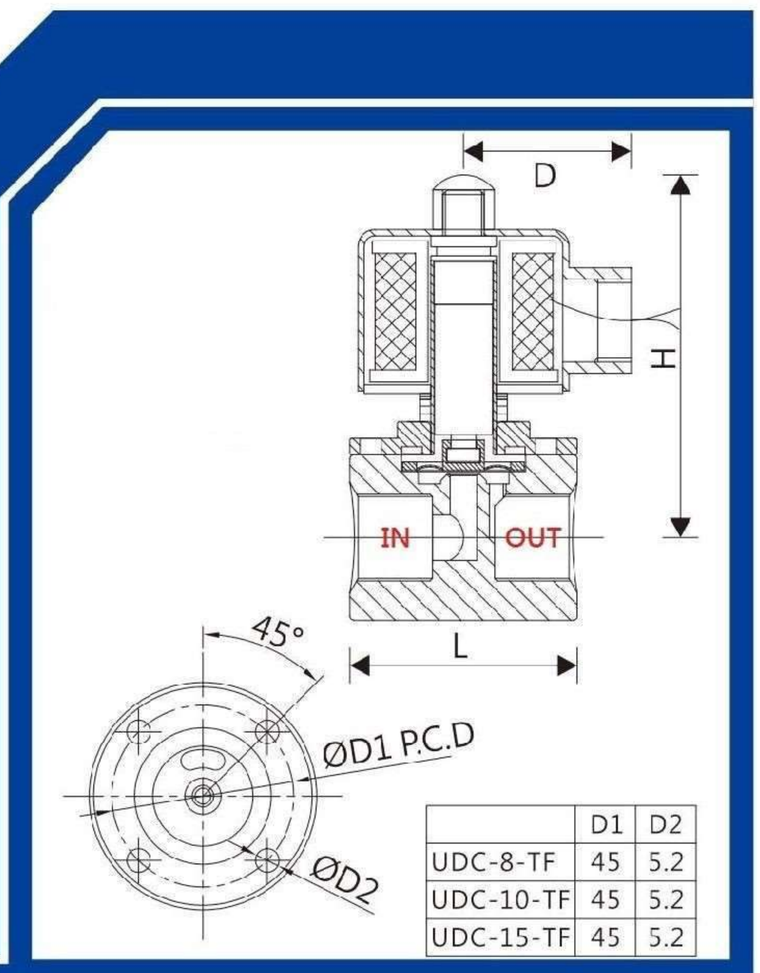

	D1	D2
UDC-8-TF	45	5.2
UDC-10-TF	45	5.2
UDC-15-TF	45	5.2

MATERIAL:

PARTS	Coil	Tube	Spring	Core	Oring	Diaphragm	Valve body
MATERIAL	Special copper wire (H)	Stainless steel	Stainless steel	Stainless steel	Synthetic rubber	NBR (PTFE coating)	PTFE

SPECIFICATION

MODEL	Waterproof DIN/flying lead Coil	NASS DIN Coil (IP65)	PIPE SIZE	CV	ORIFICE	FLUID TEMP. (°C)	Operating Pressure kgf / cm² (bar)					Vacuum (Torr)	Dimension (mm)			Weight (kg)
							Water	Air	Steam	Light oil	Gas		L	H	D	
UDC-8-TF	●		1/4"	0.28	6.5mm	-5°C ~ +80°C	0~1	0~1					50	90	48	0.53
UDC-10-TF	●		3/8"	0.28	6.5mm	-5°C ~ +80°C	0~1	0~1					50	90	48	0.52
UDC-15-TF	●		1/2"	0.28	6.5mm	-5°C ~ +80°C	0~1	0~1					55	93	48	0.58
UDC-20-TF			3/4"	4	13mm	-5°C ~ +80°C	0~0.5	0~0.5					76	119	58	1.76
UDC-25-TF			1"	4	13mm	-5°C ~ +80°C	0~0.5	0~0.5					76	119	58	1.73

SUS-6~10

SUS - 6 - □ - □ - AC110 - □

MODEL

Pipe Size
6 : 1/8"
8 : 1/4"
10 : 3/8"

Coil
□ : Standard coil
D : Waterproof DIN COIL (under 130°C)
N : NASS DIN COIL (under 130°C)
I : Waterproof COIL 2 wire type (under 130°C)

Operating Fluid
□ : Standard (steam)
G : Gas
LO : Light oil
VA : Vacuum
W : water, air

Voltage
AC220V(50/60)Hz
AC110V(50/60)Hz
DC24V

Thread
□ : Standard (BSPT or PT)
BSP: BSPP or PF
NPT: NPT

NC

PRODUCT DESCRIPTION

- SUS series is direct-acting, conductive, and normally closed (NC) 2/2 way solenoid valve.
- Able to be operated directly without pressure
- Availability of fluid type: water, air, steam, light oil, gas, vacuum
- Acceptable for customization Viton (130℃) , Silicone (130℃) and EPDM (130℃) for plug

CAUTIONS:

- Before pipelining, the pipe line must be very clean without any contaminants or any other things not ought to be existed.
- To prolong the life time of the product, Y-line filter should be installed in the front end of solenoid valve.
- The temperature of steam should not over 185℃
- AC voltage tolerance: ± 10%; DC voltage tolerance: ± 1%
- It should be installed horizontally; vertical installation is not advisable.

Not Suitalbe For Fluid As Below:

- Liquid status when it is high temperature; solid status when it is cool.
- Corrosive fluid
- Viscosity over 20cst

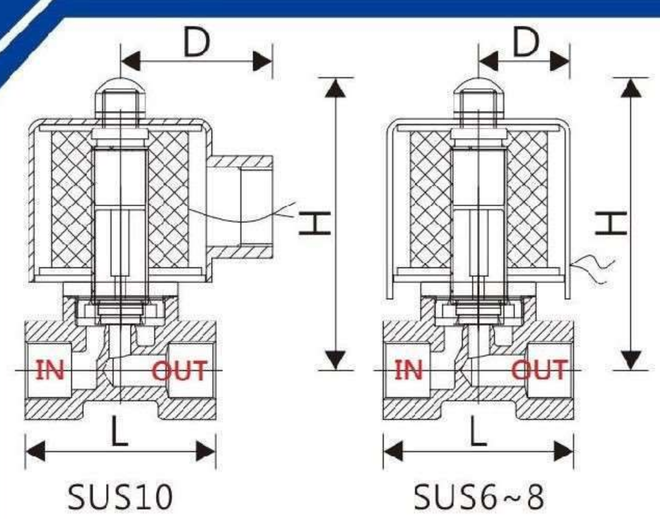

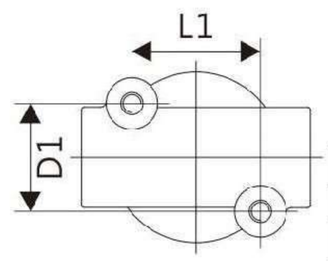

	L1	D1	M
SUS-6	23	19.3	M4x0.7
SUS-8	23	19.3	M4x0.7
SUS-10	20	21	M5x0.8

MATERIAL:

PARTS	Coil	Tube	Spring	Core	Plug	O-ring	Valve body
MATERIAL	Special copper wire (H class)	Stainless steel	Stainless steel	Stainless steel	PTFE(standard) NBR	PTFE(standard) NBR	Stainless steel

SPECIFICATION

MODEL	Waterproof DIN/flying lead Coil	NASS DIN Coil (IP65)	PIPE SIZE	CV	ORIFICE	FLUID TEMP. (°C)	Operating Pressure kgf / cm² (bar)					Vacuum (Torr)	Dimension (mm)			Weight (kg)
							Water	Air	Steam	Light oil	Gas		L	H	D	
SUS-6	●		1/8"	0.23	2.5mm	-5°C ~ +185°C	0~7	0~7	0~7	0~7			41	68	21.5	0.34
SUS-8	●		1/4"	0.23	2.5mm	-5°C ~ +185°C	0~7	0~7	0~7	0~7			41	68	21.5	0.33
SUS-10	●	●	3/8"	0.58	4mm	-5°C ~ +185°C	0~10	0~10	0~10	0~10			53	83	48	0.54
● Plug Material: PTFE																
SUS-6	●		1/8"	0.23	2.5mm	-5°C ~ +80°C	0~7	0~7			0~7	$0\sim10^{-3}$	41	68	21.5	0.34
SUS-8	●		1/4"	0.23	2.5mm	-5°C ~ +80°C	0~7	0~7			0~7	$0\sim10^{-3}$	41	68	21.5	0.33
SUS-10	●	●	3/8"	0.58	4mm	-5°C ~ +80°C	0~10	0~10			0~10	$0\sim10^{-3}$	53	83	48	0.54
● Plug Material: NBR																

SUW-15~50

SUW - 15 - □ - □ - AC110 - □

MODEL

Pipe Size
15 : 1/2"
20 : 3/4"
25 : 1"
35 : 1 1/4"
40 : 1 1/2"
50 : 2"

Coil
□ : Standard coil
D : Waterproof DIN COIL (under 130°C)
N : NASS DIN COIL (under 130°C)
I : Waterproof COIL 2 wire type (under 130°C)

Operating Fluid
□ : Standard (water, air)
G : Gas
LO : Light oil
VA : Vacuum

Voltage
AC220V(50/60)Hz
AC110V(50/60)Hz
DC24V

Thread
□ : Standard (BSPT or PT)
BSP: BSPP or PF
NPT: NPT

NC

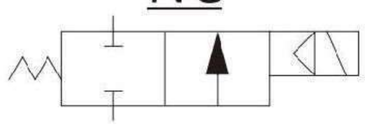

PRODUCT DESCRIPTION

- SUW series is direct, multiplex, connected diaphragm, conductive and normally closed (NC) 2/2 way solenoid valve.
- Able to be operated directly under low pressure
- Availability of fluid type: water, air, light oil, gas, vacuum
- Acceptable for customization Viton (130℃) , Silicone (130℃) and EPDM (130℃, available for SUW-20~25) for plug and diaphragm

CAUTIONS:

- Before pipelining, the pipe line must be very clean without any contaminants or any other things not ought to be existed.
- To prolong the life time of the product, Y-line filter should be installed in the front end of solenoid valve.
- AC voltage tolerance: ± 10%; DC voltage tolerance: ± 1%
- It should be installed horizontally; vertical installation is not advisable.

Not Suitalbe For Fluid As Below:

- Liquid status when it is high temperature; solid status when it is cool.
- Corrosive fluid
- Viscosity over 20cst

MATERIAL:

PARTS	Coil	Tube	Spring	Core	Plug	Diaphragm	Valve body
MATERIAL	Special copper wire (H class)	Stainless steel	Stainless steel	Stainless steel	NBR	NBR	Stainless steel

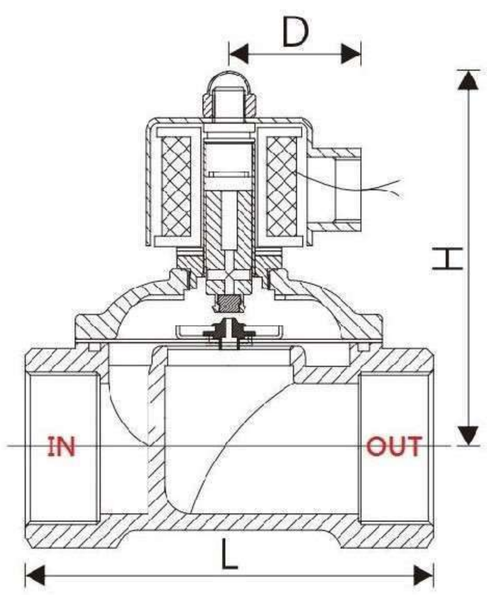

SPECIFICATION

MODEL	Waterproof DIN/flying lead Coil	NASS DIN Coil (IP65)	PIPE SIZE	CV	ORIFICE	FLUID TEMP. (°C)	Operating Pressure kgf / cm² (bar)			High Pressure Type		vacuum Torr	Dimension (mm)			Weight (kg)
							Water	Air	Light oil	Water	Air		L	H	D	
SUW-15	●	●	1/2"	4.5	15mm	-5°C ~ +80°C	0~5	0~7	0~5	0.5~10	0.5~20	$0\sim10^{-3}$	70	100	48	1
SUW-20	●	●	3/4"	8.6	20mm	-5°C ~ +80°C	0~5	0~7	0~5	0.5~10	0.5~20	$0\sim10^{-3}$	76	100	48	1.1
SUW-25	●	●	1"	12	25mm	-5°C ~ +80°C	0~5	0~7	0~5	0.5~10	0.5~20	$0\sim10^{-3}$	100	115	48	1.65
SUW-35	●	●	1 1/4"	24	35mm	-5°C ~ +80°C	0~5	0~7	0~5	0.5~10	0.5~20	$0\sim10^{-3}$	123	112	48	2.33
SUW-40	●	●	1 1/2"	28	40mm	-5°C ~ +80°C	0~5	0~7	0~5	0.5~10	0.5~20	$0\sim10^{-3}$	123	112	48	2.54
SUW-50	●	●	2"	48	50mm	-5°C ~ +80°C	0~5	0~7	0~5	0.5~10	0.5~20	$0\sim10^{-3}$	167	125	48	4.59

● High Pressure Type Use N/O Coil

SUWF-15~50

SUWF - 15 - □ - □ - AC110 - □

MODEL

Pipe Size

15 : 1/2"
20 : 3/4"
25 : 1"
35 : 1 1/4"
40 : 1 1/2"
50 : 2"

Coil

□ : Standard coil
D : Waterproof DIN COIL (under 130°C)
N : NASS DIN COIL (under 130°C)
I : Waterproof COIL 2 wire type (under 130°C)

Operating Fluid

□ : Standard (water, air)
G : Gas
LO : Light oil
VA : Vacuum

Voltage

AC220V(50/60)Hz
AC110V(50/60)Hz
DC24V

Flange End

□ : Standard (JIS 10K)
ANSI 150LB
PN 16

NC

PRODUCT DESCRIPTION

- SUWF series is direct, multiplex, connected diaphragm, conductive and normally closed (NC) 2/2 way solenoid valve.
- Able to be operated directly under low pressure
- Availability of fluid type: water, air, light oil, gas, vacuum
- Acceptable for customization Viton (130℃) , Silicone (130℃) and EPDM (130℃,available for SUW-20~25) for plug and diaphragm

CAUTIONS:

- Before pipelining, the pipe line must be very clean without any contaminants or any other things not ought to be existed.
- To prolong the life time of the product, Y-line filter should be installed in the front end of solenoid valve.
- AC voltage tolerance: ± 10%; DC voltage tolerance: ± 1%
- It should be installed horizontally; vertical installation is not advisable.

Not Suitalbe For Fluid As Below:

- Liquid status when it is high temperature; solid status when it is cool.
- Corrosive fluid
- Viscosity over 20cst

MATERIAL:

PARTS	Coil	Tube	Spring	Core	Plug	Diaphragm	Valve body
MATERIAL	Special copper wire (H class)	Stainless steel	Stainless steel	Stainless steel	NBR	NBR	Stainless steel

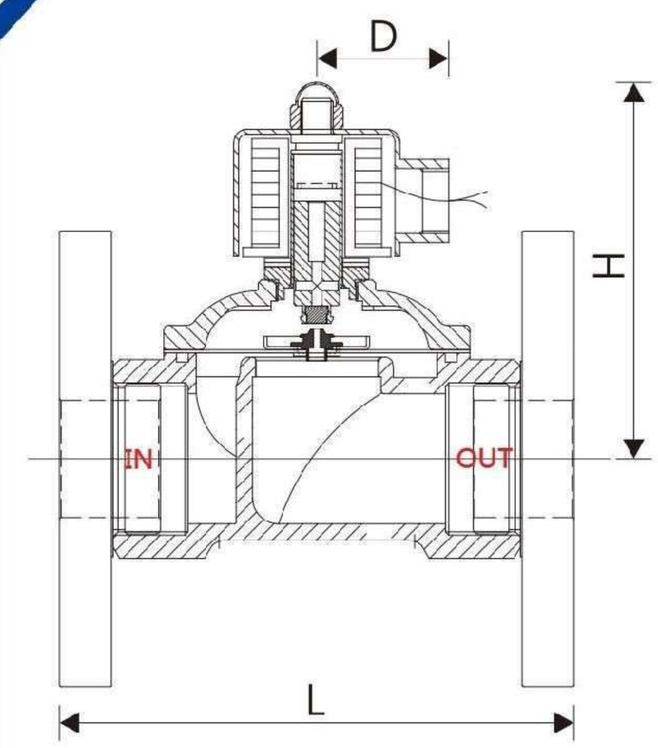

SPECIFICATION

MODEL	Waterproof DIN/flying lead Coil	NASS DIN Coil (IP65)	PIPE SIZE	CV	ORIFICE	FLUID TEMP. (°C)	Operating Pressure kgf / cm² (bar)			High Pressure Type		vacuum Torr	Dimension (mm)			Weight (kg)
							Water	Air	Light oil	Water	Air		L	H	D	
SUWF-15	●	●	1/2"	4.5	15mm	-5°C ~ +80°C	0~5	0~7	0~5	0.5~10	0.5~20	$0\sim10^{-3}$	100	100	48	2.2
SUWF-20	●	●	3/4"	8.6	20mm	-5°C ~ +80°C	0~5	0~7	0~5	0.5~10	0.5~20	$0\sim10^{-3}$	120	100	48	2.5
SUWF-25	●	●	1"	12	25mm	-5°C ~ +80°C	0~5	0~7	0~5	0.5~10	0.5~20	$0\sim10^{-3}$	150	115	48	4.1
SUWF-35	●	●	1 1/4"	24	35mm	-5°C ~ +80°C	0~5	0~7	0~5	0.5~10	0.5~20	$0\sim10^{-3}$	170	112	48	6.1
SUWF-40	●	●	1 1/2"	28	40mm	-5°C ~ +80°C	0~5	0~7	0~5	0.5~10	0.5~20	$0\sim10^{-3}$	170	112	48	6.7
SUWF-50	●	●	2"	48	50mm	-5°C ~ +80°C	0~5	0~7	0~5	0.5~10	0.5~20	$0\sim10^{-3}$	210	125	48	9.51

● High Pressure Type Use N/O Coil

SUS-15~50

SUS - 15 - □ - □ - AC110 - □

MODEL

Pipe Size
15 : 1/2"
20 : 3/4"
25 : 1"
35 : 1 1/4"
40 : 1 1/2"
50 : 2"

Coil
□ : Standard coil
D : Waterproof DIN COIL (under 130°C)
N : NASS DIN COIL (under 130°C)
I : Waterproof COIL 2 wire type (under 130°C)

Operating Fluid
□ : Standard (steam)
LO : Light oil
W : Water, air

Voltage
AC220V(50/60)Hz
AC110V(50/60)Hz
DC24V

Thread
□ : Standard (BSPT or PT)
BSP: BSPP or PF
NPT: NPT

NC

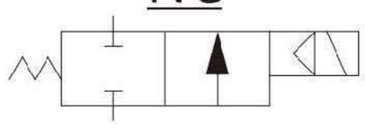

PRODUCT DESCRIPTION

- SUS series is multiplex, pilot operated piston, conductive and normally closed (NC) 2/2 way solenoid valve.
- Availability of fluid type: water, air, steam, light oil
- Specially suitable for frequent operation

CAUTIONS:

- Before pipelining, the pipe line must be very clean without any contaminants or any other things not ought to be existed.
- To prolong the life time of the product, Y-line filter should be installed in the front end of solenoid valve.
- AC voltage tolerance: ± 10%; DC voltage tolerance: ± 1%
- It should be installed horizontally; vertical installation is not advisable.

Not Suitalbe For Fluid As Below:

- Liquid status when it is high temperature; solid status when it is cool.
- Corrosive fluid
- Viscosity over 20cst

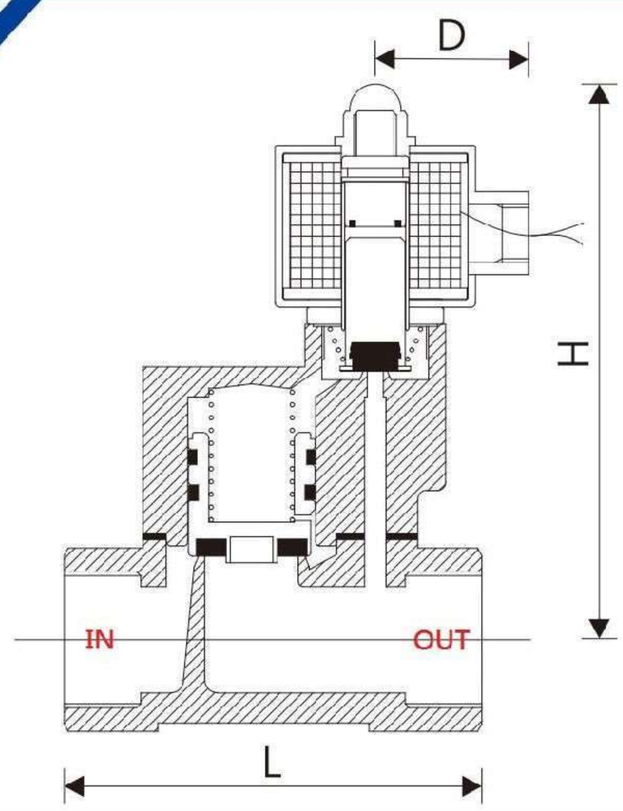

MATERIAL:

PARTS	Coil	Tube	Spring	Core	Plug	Piston Spring	Piston	Piston plug	Valve body
MATERIAL	Special copper wire (H class)	Stainless steel	Stainless steel	Stainless steel	PTFE	Stainless steel	Stainless steel	PTFE	Stainless steel

SPECIFICATION

MODEL	Waterproof DIN/flying lead Coil	NASS DIN Coil (IP65)	PIPE SIZE	CV	ORIFICE	FLUID TEMP. (°C)	Operating Pressure kgf / cm² (bar)					Dimension (mm)			Weight (kg)
							Water	Air	Steam	Light oil	Gas	L	H	D	
SUS-15	●	●	1/2"	4.0	17mm	-5°C ~ +185°C	0.5~10	0.5~10	0.5~10	0.5~10		84	115	48	1.38
SUS-20	●	●	3/4"	6.0	17mm	-5°C ~ +185°C	0.5~10	0.5~10	0.5~10	0.5~10		84	120	48	1.43
SUS-25	●	●	1"	12	22mm	-5°C ~ +185°C	0.5~10	0.5~10	0.5~10	0.5~10		98	132	48	1.88
SUS-35	●	●	1 1/4"	18	30mm	-5°C ~ +185°C	1~10	1~10	1~10	1~10		123	142	48	2.62
SUS-40	●	●	1 1/2"	22	30mm	-5°C ~ +185°C	1~10	1~10	1~10	1~10		123	146	48	2.72
SUS-50	●	●	2"	48	50mm	-5°C ~ +185°C	1~10	1~10	1~10	1~10		167	173	48	5.45

SUSF-15~50

SUSF - 15 - □ - □ - AC110 - □

MODEL

Pipe Size

15 : 1/2"
20 : 3/4"
25 : 1"
35 : 1 1/4"
40 : 1 1/2"
50 : 2"

Coil

□ : Standard coil
D : Waterproof DIN COIL (under 130°C)
N : NASS DIN COIL (under 130°C)
I : Waterproof COIL 2 wire type (under 130°C)

Operating Fluid

□ : Standard (steam)
LO : Light oil
W : Water, air

Voltage

AC220V(50/60)Hz
AC110V(50/60)Hz
DC24V

Flange End

□ : Standard (JIS 10K)
ANSI 150LB
PN 16

NC

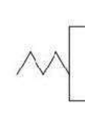

PRODUCT DESCRIPTION

- SUSF series is multiplex, pilot operated piston, conductive and normally closed (NC) 2/2 way solenoid valve.
- Availability of fluid type: water, air, steam, light oil
- Specially suitable for frequent operation

CAUTIONS:

- Before pipelining, the pipe line must be very clean without any contaminants or any other things not ought to be existed.
- To prolong the life time of the product, Y-line filter should be installed in the front end of solenoid valve.
- AC voltage tolerance: ± 10%; DC voltage tolerance: ± 1%
- It should be installed horizontally; vertical installation is not advisable.

Not Suitalbe For Fluid As Below:

- Liquid status when it is high temperature; solid status when it is cool.
- Corrosive fluid
- Viscosity over 20cst

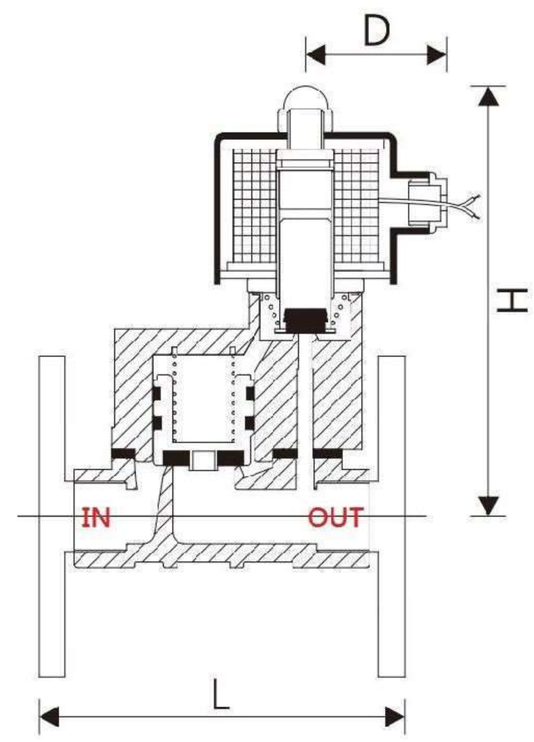

MATERIAL:

PARTS	Coil	Tube	Spring	Core	Plug	Piston Spring	Piston	Piston plug	Valve body
MATERIAL	Special copper wire (H class)	Stainless steel	Stainless steel	Stainless steel	PTFE	Stainless steel	Stainless steel	PTFE	Stainless steel

SPECIFICATION

MODEL	Waterproof DIN/flying lead Coil	NASS DIN Coil (IP65)	PIPE SIZE	CV	ORIFICE	FLUID TEMP. (°C)	Operating Pressure kgf / cm² (bar)					Dimension (mm)			Weight (kg)
							Water	Air	Steam	Light oil	Gas	L	H	D	
SUSF-15	●	●	1/2"	4.0	17mm	-5°C ~ +185°C	0.5~10	0.5~10	0.5~10	0.5~10		120	115	48	2.5
SUSF-20	●	●	3/4"	6.0	17mm	-5°C ~ +185°C	0.5~10	0.5~10	0.5~10	0.5~10		120	120	48	3
SUSF-25	●	●	1"	12	22mm	-5°C ~ +185°C	0.5~10	0.5~10	0.5~10	0.5~10		157	132	48	4.3
SUSF-35	●	●	1 1/4"	18	30mm	-5°C ~ +185°C	1~10	1~10	1~10	1~10		170	142	48	5.6
SUSF-40	●	●	1 1/2"	22	30mm	-5°C ~ +185°C	1~10	1~10	1~10	1~10		170	146	48	6.1
SUSF-50	●	●	2"	48	50mm	-5°C ~ +185°C	1~10	1~10	1~10	1~10		210	173	48	9.6

SUW-80F

SUW - 80 F - □ - AC110 - □

- SUW: MODEL
- 80: Pipe Size — 80 : 3"
- F: Operating Fluid — □ : Standard (water, air); LO : Light oil
- AC110: Voltage — AC220V(50/60)Hz, AC110V(50/60)Hz, DC24V
- □: Flange End — JIS10K

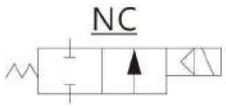

PRODUCT DESCRIPTION

- SUW-F series is multiplex, pilot operated piston, conductive and normally closed (NC) 2/2 way solenoid valve.
- Availability of fluid type: water, air, light oil

CAUTIONS:

- Minimum pressure to open: over 0.5kgf-cm^2
- Before pipelining, the pipe line must be very clean without any contaminants or any other things not ought to be existed.
- To prolong the life time of the product, Y-line filter should be installed in the front end of solenoid valve.
- AC voltage tolerance: ± 10%; DC voltage tolerance: ± 1%
- It should be installed horizontally; vertical installation is not advisable..

Not Suitalbe For Fluid As Below:

- Liquid status when it is high temperature; solid status when it is cool.
- Corrosive fluid
- Viscosity over 20cst

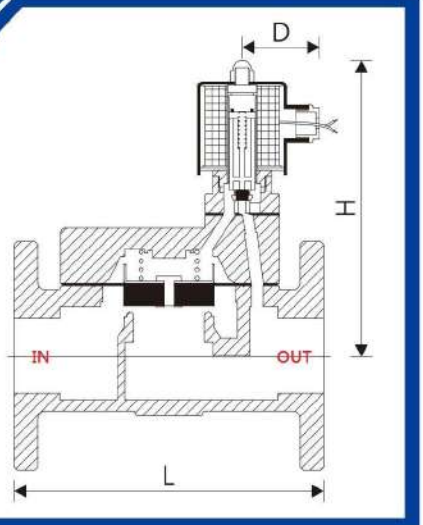

MATERIAL:

PARTS	Coil	Tube	Spring	Core	Plug	Diaphragm	Valve body
MATERIAL	Special copper wire (H class)	Stainless steel	Stainless steel	Stainless steel	NBR	NBR	Stainless steel

SPECIFICATION

MODEL	Waterproof DIN/flying lead Coil	NASS DIN Coil (IP65)	PIPE SIZE	CV	ORIFICE	FLUID TEMP. (°C)	Operating Pressure kgf / cm^2 (bar)					Dimension (mm)			Weight (kg)
							Water	Air	Steam	Light oil	Gas	L	H	D	
SUW-80F			3"	100	80mm	-5°C ~ +80°C	0.5~8	0.5~8		0.5~5		240	188	58	15.9

SUS-80F

SUS - 80 F - □ - AC110 - □

- SUS: MODEL
- 80: Pipe Size — 80 : 3"
- □: Operating Fluid — □ : Standard (water, air); LO : Light oil
- AC110: Voltage — AC220V(50/60)Hz, AC110V(50/60)Hz, DC24V
- □: Flange End — JIS10K

NC

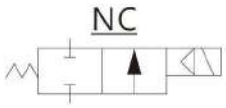

PRODUCT DESCRIPTION

- SUS-F series is multiplex, pilot operated piston, conductive and normally closed (NC) 2/2 way solenoid valve.
- Availability of fluid type: water, air, light oil

CAUTIONS:

- Minimum pressure to open: over 1kgf-cm^2
- Before pipelining, the pipe line must be very clean without any contaminants or any other things not ought to be existed.
- To prolong the life time of the product, Y-line filter should be installed in the front end of solenoid valve.
- AC voltage tolerance: ± 10%; DC voltage tolerance: ± 1%
- It should be installed horizontally; vertical installation is not advisable.

Not Suitalbe For Fluid As Below:

- Liquid status when it is high temperature; solid status when it is cool.
- Corrosive fluid
- Viscosity over 20cst

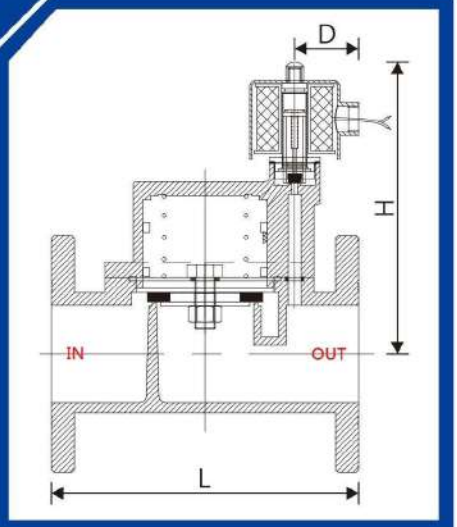

MATERIAL:

PARTS	Coil	Tube	Spring	Core	Plug	Piston Spring	Piston	Piston plug	Valve body
MATERIAL	Special copper wire (H class)	Stainless steel	Stainless steel	Stainless steel	PTFE	Stainless steel	Stainless steel	PTFE	Stainless steel

SPECIFICATION

MODEL	Waterproof DIN/flying lead Coil	NASS DIN Coil (IP65)	PIPE SIZE	CV	ORIFICE	FLUID TEMP. (°C)	Operating Pressure kgf / cm^2 (bar)					Dimension (mm)			Weight (kg)
							Water	Air	Steam	Light oil	Gas	L	H	D	
SUS-80F			3"	100	80mm	-5°C ~ +185°C	1~10	1~10	1~10	1~10		240	232	58	19.9

UW-35F~100F

UW - 35 F - □ - □ - AC110 - □

- **UW** — MODEL
- **35** — Pipe Size
  - 35 : 1 1/4"
  - 40 : 1 1/2"
  - 50 : 2"
  - 65 : 2 1/2"
  - 80 : 3"
  - 100 : 4"
- **F** — Coil
  - □ : Standard coi
  - D : Waterproof DIN COIL (under 130°C)
  - I : Waterproof COIL 2 wire type (under 130°C)
- **□** — Operating Fluid
  - □ : Standard (water, air)
  - LO : Light oil
- **AC110** — Voltage
  - AC220V(50/60)Hz
  - AC110V(50/60)Hz
  - DC24V
- **□** — Flange End
  - □ : Standard (JIS 10K)
  - ANSI 150LB
  - PN 16

NC

UD Series

PRODUCT DESCRIPTION

- UW-F series is multiplex, pilot operated piston, conductive and normally closed (NC) 2/2 way solenoid valve.
- Availability of fluid type: water, air, light oil

CAUTIONS:

- Minimum pressure to open: over 0.5kgf-cm²
- Before pipelining, the pipe line must be very clean without any contaminants or any other things not ought to be existed.
- To prolong the life time of the product, Y-line filter should be installed in the front end of solenoid valve.
- AC voltage tolerance: ± 10%; DC voltage tolerance: ± 1%
- It should be installed horizontally; vertical installation is not advisable.

Not Suitalbe For Fluid As Below:

- Liquid status when it is high temperature; solid status when it is cool.
- Corrosive fluid
- Viscosity over 20cst

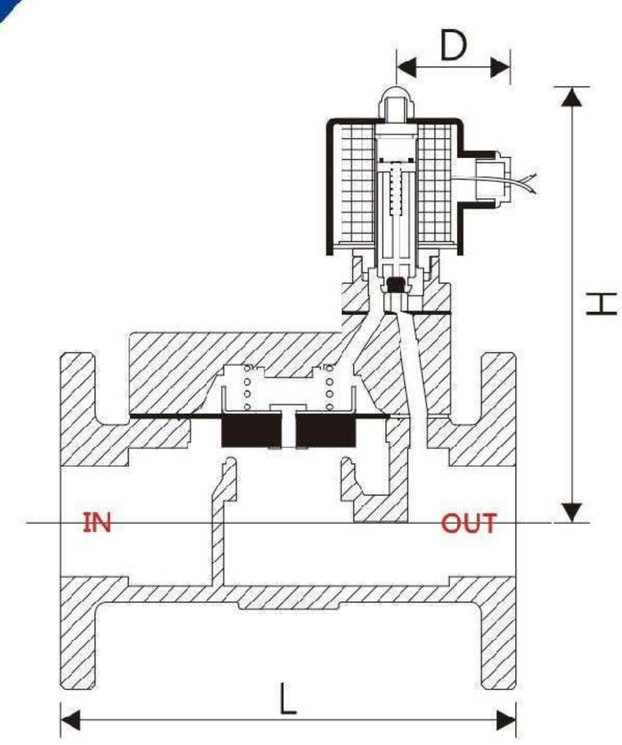

MATERIAL:

PARTS	Coil	Tube	Spring	Core	Plug	Diaphragm	Valve body
MATERIAL	Special copper wire (H class)	Stainless steel	Stainless steel	Stainless steel	NBR	NBR	Cast Iron (FC-20)

SPECIFICATION

MODEL	Waterproof DIN/flying lead Coil	NASS DIN Coil (IP65)	PIPE SIZE	CV	ORIFICE	FLUID TEMP. (°C)	Operating Pressure kgf / cm² (bar)					Dimension (mm)			Weight (kg)
							Water	Air	Steam	Light oil	Gas	L	H	D	
UW-35F	●		1 1/4"	22	35mm	-5°C ~ +80°C	0.5~8	0.5~8		0.5~5		200	164	48	8.9
UW-40F	●		1 1/2"	30	40mm	-5°C ~ +80°C	0.5~8	0.5~8		0.5~5		200	164	48	9.6
UW-50F	●		2"	40	50mm	-5°C ~ +80°C	0.5~8	0.5~8		0.5~5		210	170	48	11.3
UW-65F	●		2 1/2"	68	65mm	-5°C ~ +80°C	0.5~8	0.5~8		0.5~5		240	177	48	15.6
UW-80F	●		3"	102	80mm	-5°C ~ +80°C	0.5~8	0.5~8		0.5~5		300	191	48	20.8
UW-100F	●		4"	180	100mm	-5°C ~ +80°C	0.5~8	0.5~8		0.5~5		340	207	48	31.7

US-35F~100F

US - 35 F - □ - □ - AC110 - □

MODEL

Pipe Size

35 : 1 1/4"
40 : 1 1/2"
50 : 2"
65 : 2 1/2"
80 : 3"
100 : 4"

Coil

□ : Standard coi
D : Waterproof DIN COIL (under 130°C)
I : Waterproof COIL 2 wire type (under 130°C)

Operating Fluid

□ : Standard (steam)
LO : Light oil
W : Water, air

Voltage

AC220V(50/60)Hz
AC110V(50/60)Hz
DC24V

Flange End

□ : Standard (JIS 10K)
ANSI 150LB
PN 16

NC

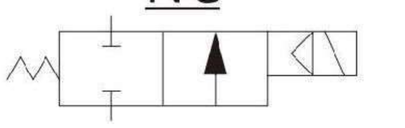

PRODUCT DESCRIPTION

- SUS-F series is multiplex, pilot operated piston, conductive and normally closed (NC) 2/2 way solenoid valve.
- Availability of fluid type: water, air, light oil

CAUTIONS:

- Minimum pressure to open: over 0.5kgf-cm^2
- Before pipelining, the pipe line must be very clean without any contaminants or any other things not ought to be existed.
- To prolong the life time of the product, Y-line filter should be installed in the front end of solenoid valve.
- AC voltage tolerance: ± 10%; DC voltage tolerance: ± 1%
- It should be installed horizontally; vertical installation is not advisable.

Not Suitalbe For Fluid As Below:

- Liquid status when it is high temperature; solid status when it is cool.
- Corrosive fluid
- Viscosity over 20cst

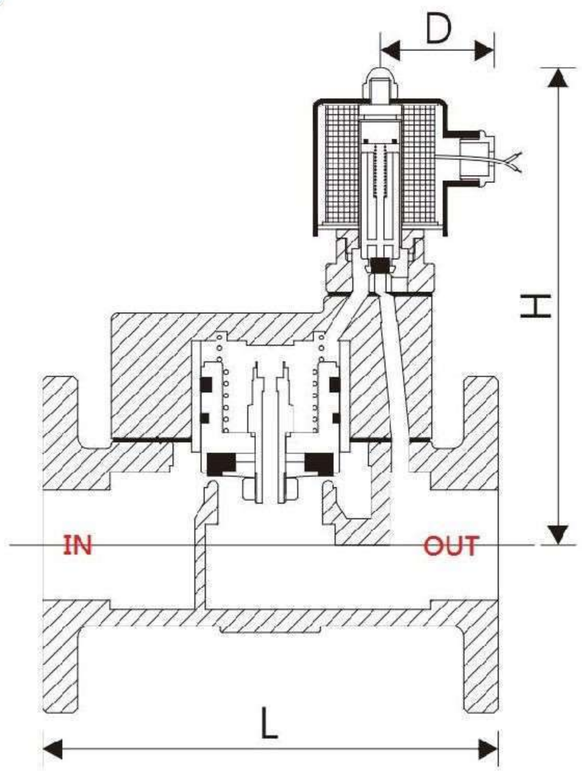

MATERIAL:

PARTS	Coil	Tube	Spring	Core	Plug	Piston Spring	Piston plug	Valve body
MATERIAL	Special copper wire (H class)	Stainless steel	Stainless steel	Stainless steel	PTFE	Stainless steel	PTFE	Cast Iron (FC-20)

SPECIFICATION

MODEL	Waterproof DIN/flying lead Coil	NASS DIN Coil (IP65)	PIPE SIZE	CV	ORIFICE	FLUID TEMP. (°C)	Operating Pressure kgf / cm^2 (bar)					Dimension (mm)			Weight (kg)
							Water	Air	Steam	Light oil	Gas	L	H	D	
US-35F	●		1 1/4"	22	35mm	-5°C ~ +185°C	1~10	1~10	1~10	1~10		200	189	48	10.7
US-40F	●		1 1/2"	30	40mm	-5°C ~ +185°C	1~10	1~10	1~10	1~10		200	189	48	10.9
US-50F	●		2"	40	50mm	-5°C ~ +185°C	1~10	1~10	1~10	1~10		210	202	48	13.2
US-65F	●		2 1/2"	68	65mm	-5°C ~ +185°C	1~10	1~10	1~10	1~10		240	209	48	19.2
US-80F	●		3"	100	80mm	-5°C ~ +185°C	1~10	1~10	1~10	1~10		300	228	48	27
US-100F	●		4"	175	100mm	-5°C ~ +185°C	1~10	1~10	1~10	1~10		340	244	48	38.7

Normally Closed Type-Optional Items

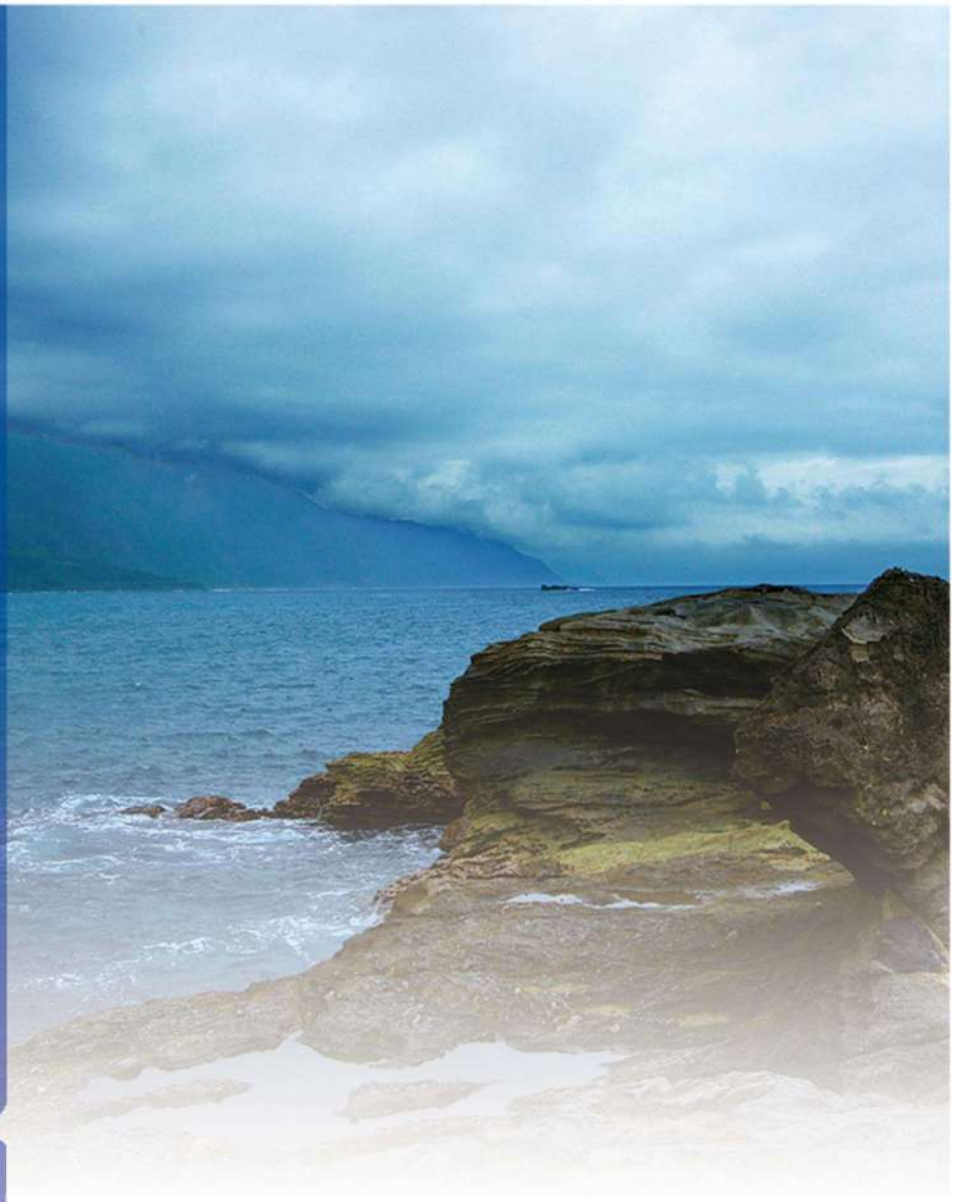

- Direct-Acting type Diagram
- Multiplex, Pilot Operated Diaphragm Diagram
- Multiplex, Pilot Operated Piston Diagram
- Direct-Multiplex, Pilot Operated Piston Diagram
- Direct-Multiplex, Connected Diaphragm Diagram

Optional Items

Please confirm the solenoid valve model number, and take the Coil Matching Table for reference.
Please always feel free to contact us for any further questions.

Coil set

Piston, Spring set

Tube set

Diaphragm, Connected spring set

Core, Spring set

Direct-Acting type Diagram

Normally Closed(N/C) Series

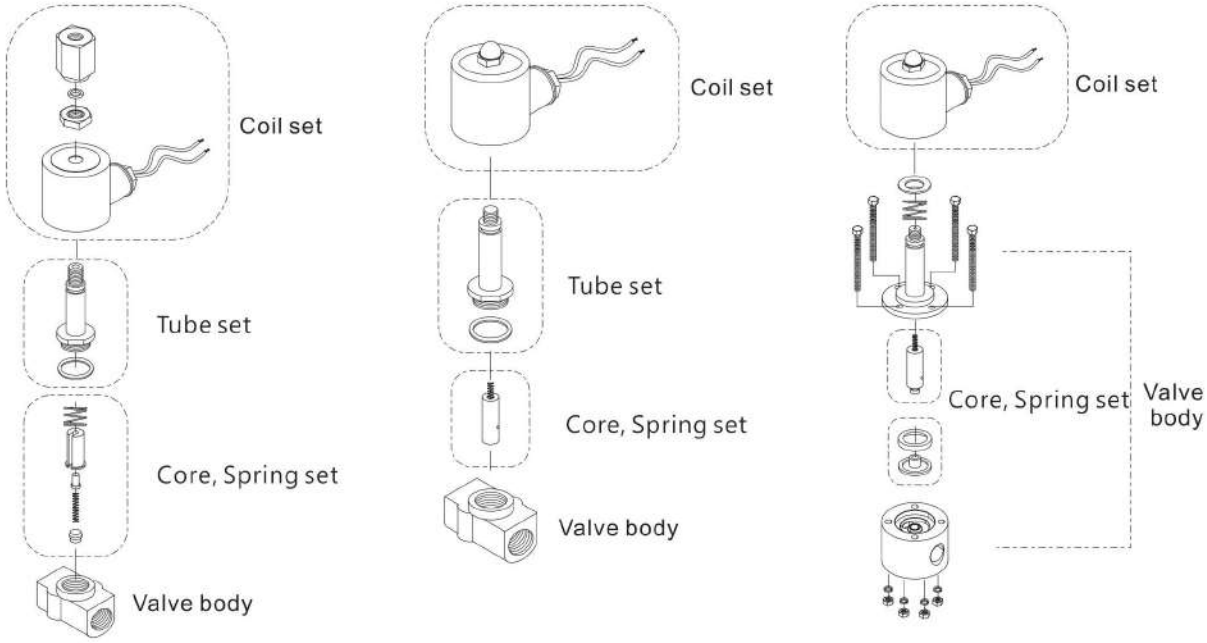

Multiplex, Pilot Operated Diaphragm Diagram

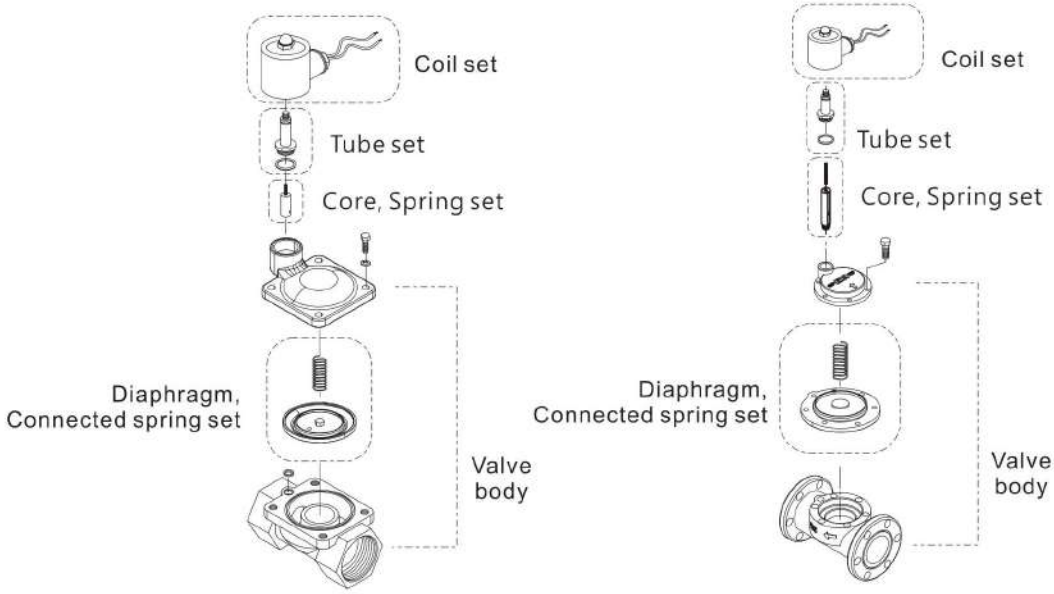

Multiplex, Pilot Operated Piston Diagram

Normally Closed(N/C) Series

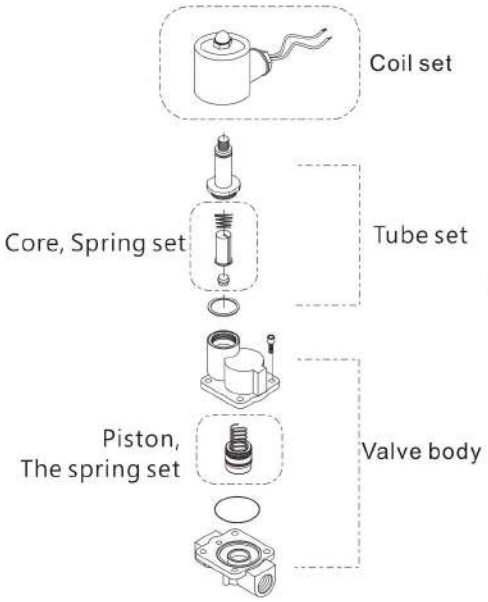

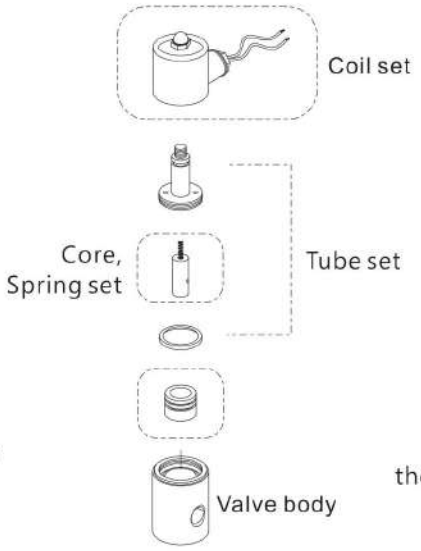

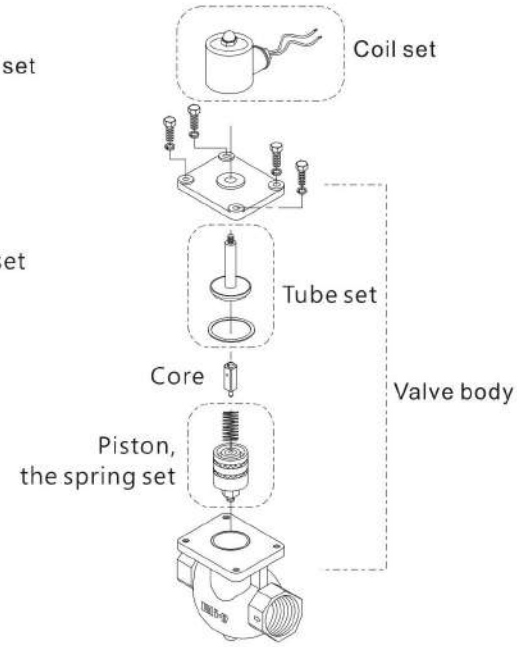

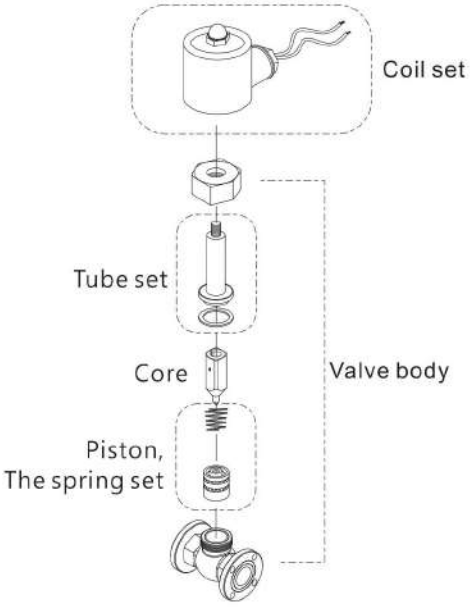

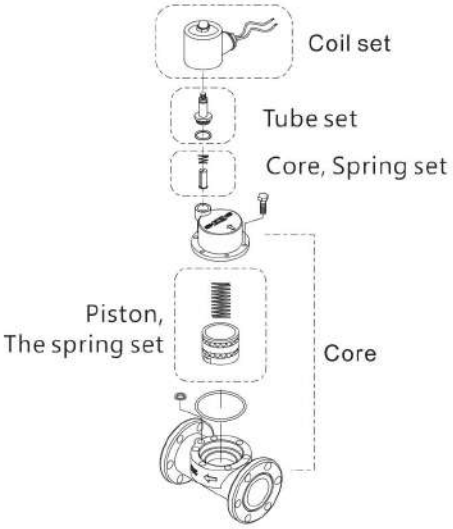

-Direct-Multiplex, Pilot Operated Piston Diagram

Normally Closed(N/C) Series

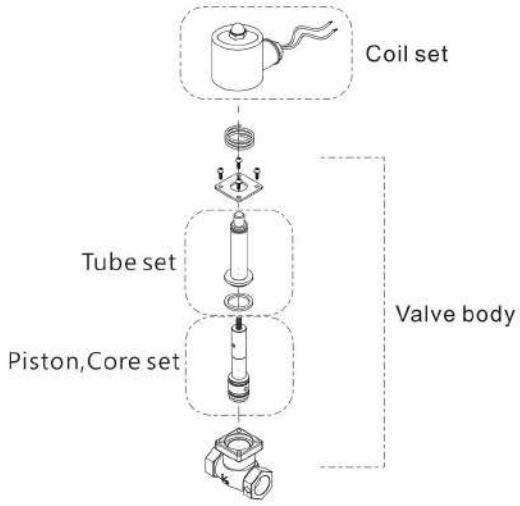

-Direct-Multiplex, Connected Diaphragm Diagram

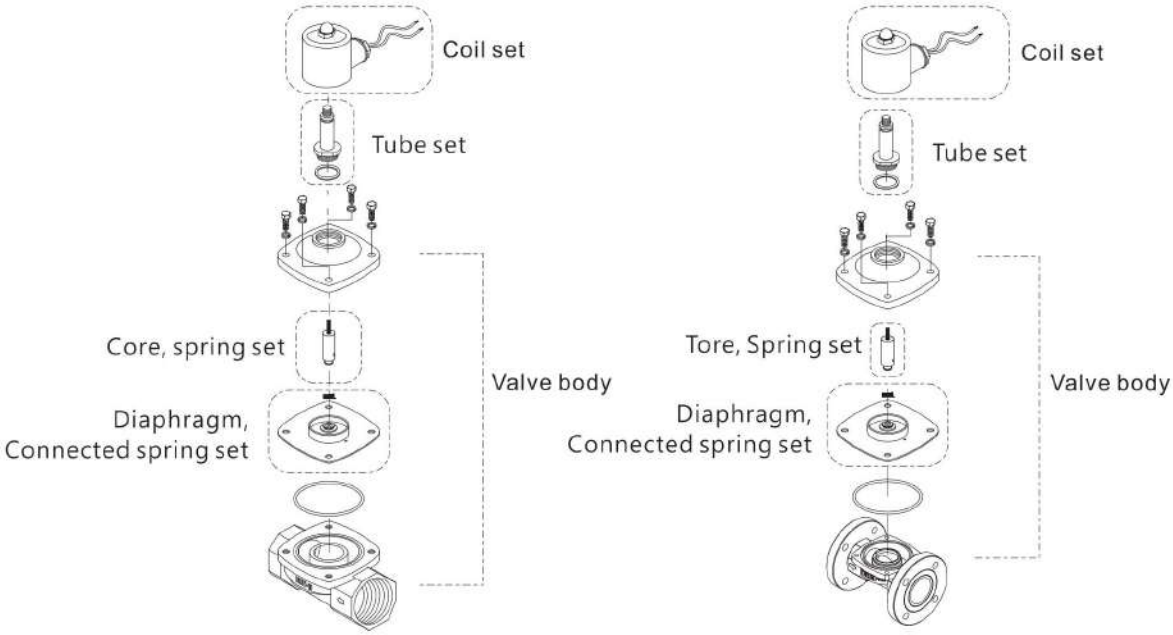

Solenoid Valve- Normally Open Type

- UD-6NO~10NO
- UW-10NO~50NO
- UPS-15NO~25NO
- SUS-6NO~10NO
- SUW-15NO~50NO
- SUS-15NO~50NO
- SUW-80FNO
- SUS-80FNO
- UW-35F-NO~100F-NO
- US-35F-NO~100F-NO

UD-6NO~10NO

UD - 6 NO - □ - □ - AC110 - □

MODEL

Pipe Size
6 : 1/8"
8 : 1/4"
10 : 3/8"

Coil
□ : Standard coi
D : Waterproof DIN COIL (under 130°C)
I : Waterproof COIL 2 wire type (under 130°C)

Operating Fluid
□ : Standard (water, air)
G : Gas
LO : Light oil
VA : Vacuum

Voltage
AC220V(50/60)HZ
AC110V(50/60)HZ
DC24V

Thread
□ : Standard (BSPT or PT)
BSP : BSPP or PF
NPT : NPT

NO

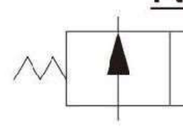

PRODUCT DESCRIPTION

- UDNO series is direct-acting, conductive, and normally open (NO) 2/2 way solenoid valve.
- Able to be operated directly without pressure
- Availability of fluid type: water, air, light fuel, gas, vacuum
- Acceptable for customize Viton (130℃) , Silicone (130℃) and EPDM (130℃)

CAUTIONS:

- Before pipelining, the pipe line must be very clean without any contaminants or any other things not ought to be existed.
- To prolong the life time of the product, Y-type filter at the front end of solenoid valve.
- AC voltage tolerance: ± 10%; DC voltage tolerance: ± 1%
- It should be installed horizontally; vertical installation is not advisable.

Not Suitalbe For Fluid As Below:

- Liquid status when it is high temperature solid status when cool.
- Corrosive fluid
- Viscosity over 20cst

MATERIAL:

PARTS	Coil	Tube	Spring	Core	Plug	O-ring	Valve body
MATERIAL	Special copper wire (H class)	Stainless steel	Stainless steel	Stainless steel	NBR (Viton, Silicone)	NBR	Brass

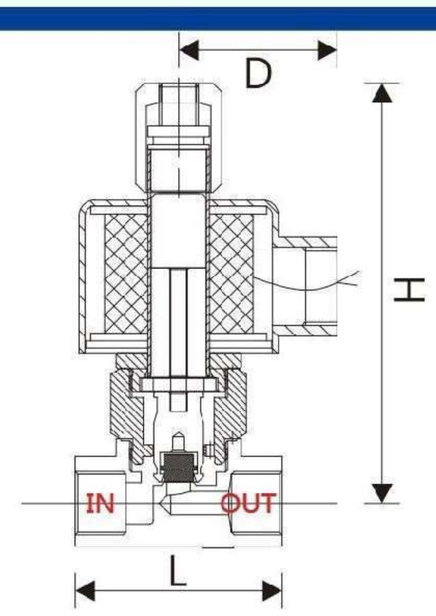

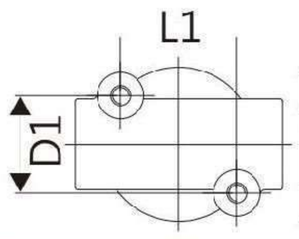

	L1	D1	M
UD-6NO	23	19.3	M4x0.7
UD-8NO	23	19.3	M4x0.7
UD-10NO	20	21	M5x0.8

Normally Open Type

SPECIFICATION

MODEL	Waterproof DIN/flying lead Coil	NASS DIN Coil (IP65)	PIPE SIZE	CV	ORIFICE	FLUID TEMP. (°C)	Operating Pressure kgf / cm² (bar)					Vacuum (Torr)	Dimension (mm)			Weight (kg)
							Water	Air	Steam	Light oil	Gas		L	H	D	
UD-6 NO			1/8"	0.23	2.5mm	-5°C ~ +80°C	0~7	0~7		0~7	0~7	$0\sim10^{-3}$	41	87	21.5	0.44
UD-8 NO			1/4"	0.23	2.5mm	-5°C ~ +80°C	0~7	0~7		0~7	0~7	$0\sim10^{-3}$	41	87	21.5	0.43
UD-8 NO			1/4"	0.58	4mm	-5°C ~ +80°C	0~3	0~3		0~3	0~3	$0\sim10^{-3}$	41	87	21.5	0.43
UD-8 NO			1/4"	0.79	6mm	-5°C ~ +80°C	0~1	0~1		0~1	0~1	$0\sim10^{-3}$	41	87	21.5	0.43
UD-8H NO			1/4"	0.18	1.2mm	-5°C ~ +130°C	0~20	0~20		0~20	0~20	$0\sim10^{-3}$	41	87	21.5	0.43
UD-10 NO	●		3/8"	0.58	4mm	-5°C ~ +80°C	0~10	0~10		0~10	0~10	$0\sim10^{-3}$	53	105	48	0.7

● UD-6~UD-8 NO Voltage: DC24V , (H): 79.5mm

UW-10NO~50NO

UW - 10 NO - □ - □ - AC110 - □

- **UW** — MODEL
- **10** — Pipe Size
  - 10 : 3/8"
  - 15 : 1/2"
  - 20 : 3/4"
  - 25 : 1"
  - 35 : 1 1/4"
  - 40 : 1 1/2"
  - 50 : 2"
- **NO** — Coil
  - □ : Standard coi
  - D : Waterproof DIN COIL (under 130°C)
  - I : Waterproof COIL 2 wire type (under 130°C)
- □ — Operating Fluid
  - □ : Standard (water, air)
  - LO : Light oil
  - VA : Vacuum
  - G : Gas
- **AC110** — Voltage
  - AC220V(50/60)Hz
  - AC110V(50/60)Hz
  - DC24V
- □ — Thread
  - □ : Standard (BSPT or PT)
  - BSP : BSPP or PF
  - NPT : NPT

NO

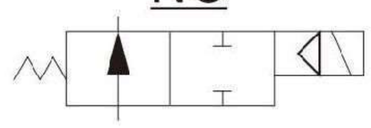

PRODUCT DESCRIPTION

- UW-NO series is direct, multiplex, connected diaphragm, conductive and normally open (NO) 2/2 way solenoid valve.
- Able to operated directly under low pressure
- Availability of fluid type: water, air, light oil
- Acceptable for customize Viton (130℃) , Silicone (130℃) and EPDM (130℃)

CAUTIONS:

- Before pipelining, the pipe line must be very clean without any contaminants or any other things not ought to be existed.
- To prolong the life time of the product, Y-type filter at the front end of solenoid valve.
- AC voltage tolerance: ± 10%; DC voltage tolerance: ± 1%
- It should be installed horizontally; vertical installation is not advisable.

Not Suitalbe For Fluid As Below:

- Liquid status when it is high temperature solid status when cool.
- Corrosive fluid
- Viscosity over 20cst

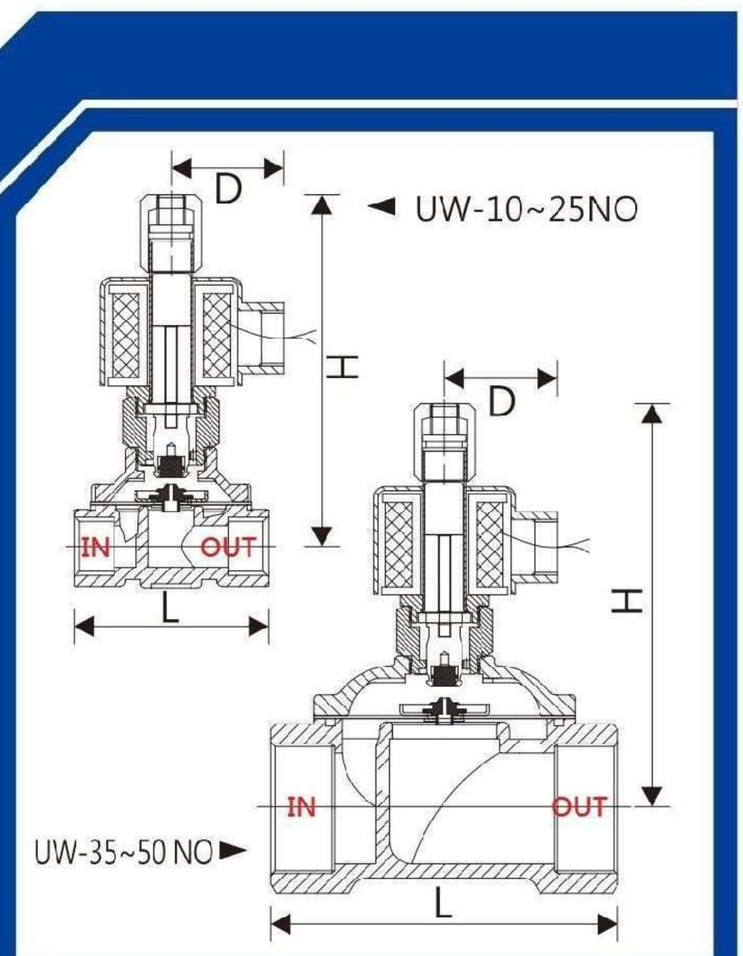

MATERIAL:

PARTS	Coil	Tube	Spring	Core	Plug	Diaphragm	Valve body
MATERIAL	Special copper wire (H class)	Stainless steel	Stainless steel	Stainless steel	NBR	NBR	Brass

SPECIFICATION

MODEL	Waterproof DIN/flying lead Coil	NASS DIN Coil (IP65)	PIPE SIZE	CV	ORIFICE	FLUID TEMP. (°C)	Operating Pressure kgf / cm² (bar)					Vacuum (Torr)	Dimension (mm)			Weight (kg)
							Water	Air	Steam	Light oil	Gas		L	H	D	
UW-10 NO	●		3/8"	4.5	15mm	-5°C ~ +80°C	0~5	0~7		0~5	0~7	$0\sim10^{-3}$	70	128	48	1
UW-15 NO	●		1/2"	4.5	15mm	-5°C ~ +80°C	0~5	0~7		0~5	0~7	$0\sim10^{-3}$	70	128	48	0.98
UW-20 NO	●		3/4"	8.6	20mm	-5°C ~ +80°C	0~5	0~7		0~5	0~7	$0\sim10^{-3}$	73	133	48	1.12
UW-25 NO	●		1"	12	25mm	-5°C ~ +80°C	0~5	0~7		0~5	0~7	$0\sim10^{-3}$	100	138	48	1.7
UW-35 NO	●		1 1/4"	24	35mm	-5°C ~ +80°C	0~5	0~7		0~5	0~7	$0\sim10^{-3}$	125	139	48	2.5
UW-40 NO	●		1 1/2"	28	40mm	-5°C ~ +80°C	0~5	0~7		0~5	0~7	$0\sim10^{-3}$	125	145	48	2.9
UW-50 NO	●		2"	48	50mm	-5°C ~ +80°C	0~5	0~7		0~5	0~7	$0\sim10^{-3}$	167	156	48	4.5

UPS-15NO~25NO

UPS - 15 NO- □ - □ - AC110 - □

- MODEL
- Pipe Size: 15 : 1/2", 20 : 3/4", 25 : 1"
- Coil: □ : Standard coi; D : Waterproof DIN COIL (under 130°C); I : Waterproof COIL 2 wire type (under 130°C)
- Operating Fluid: □ : Standard (Water, air); LO : Light oil
- Voltage: AC220V(50/60)Hz, AC110V(50/60)Hz, DC24V
- Thread: □ : Standard (BSPT or PT); BSP : BSPP or PF; NPT : NPT

NO

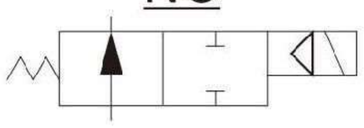

PRODUCT DESCRIPTION

- UPS-NO series is multiplex, pilot operated piston, conductive and normally open (NO) 2/2 way solenoid valve.
- Specially suitable for frequently operated
- Availability of fluid type: water, air, light oil
- Acceptable for customize Viton , Silicone and EPDM plug

CAUTIONS:

- Minimum pressure to close : over 0.5kgf-cm^2
- Before pipelining, the pipe line must be very clean without any contaminants or any other things not ought to be existed.
- To prolong the life time of the product, Y-type filter at the front end of solenoid valve.
- AC voltage tolerance: ± 10%; DC voltage tolerance: ± 1%
- It should be installed horizontally; vertical installation is not advisable.

Not Suitalbe For Fluid As Below:

- Liquid status when it is high temperature solid status when cool.
- Corrosive fluid
- Viscosity over 20 cst

MATERIAL:

PARTS	Coil	Tube	Spring	Core	Plug	Piston Spring	Piston	Piston plug	Valve body
MATERIAL	Special copper wire (H class)	Stainless steel	Stainless steel	Stainless steel	VITON	Stainless steel	Brass	PTFE	Cast Bronze

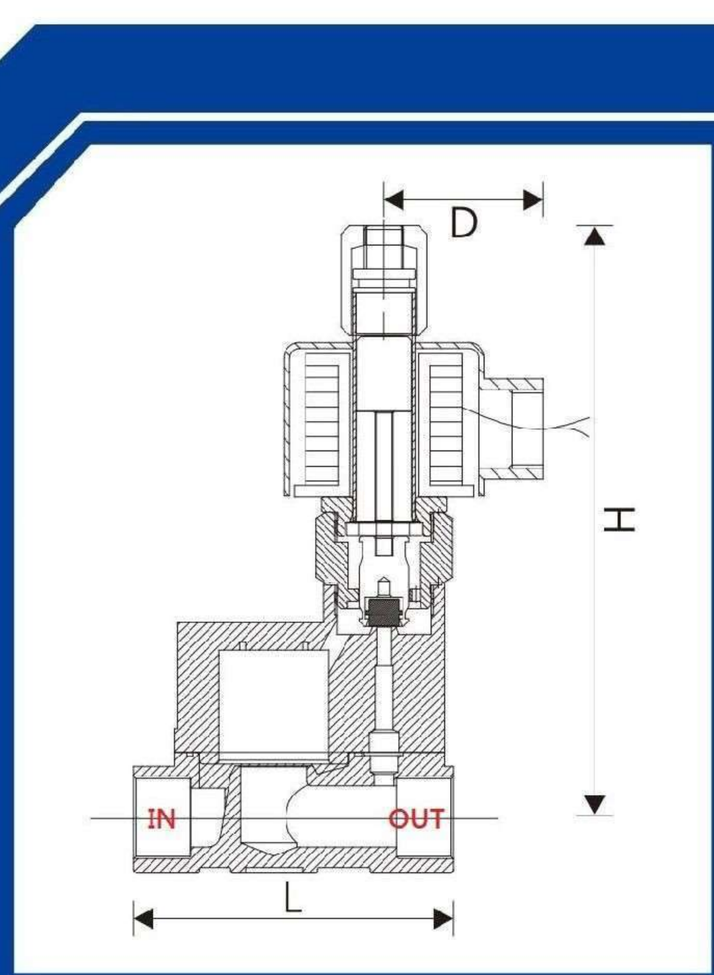

Normally Open Type

SPECIFICATION

MODEL	Waterproof DIN/flying lead Coil	NASS DIN Coil (IP65)	PIPE SIZE	CV	ORIFICE	FLUID TEMP. (°C)	Operating Pressure kgf / cm^2 (bar)					Dimension (mm)			Weight (kg)
							Water	Air	Steam	Light oil	Gas	L	H	D	
UPS-15 NO	●		1/2"	4.0	17mm	-5°C ~ +130°C	0.5~10	0.5~10		0.5~8		82	150	48	1.46
UPS-20 NO	●		3/4"	6.0	17mm	-5°C ~ +130°C	0.5~10	0.5~10		0.5~8		82	152	48	1.58
UPS-25 NO	●		1"	12	22mm	-5°C ~ +130°C	0.5~10	0.5~10		0.5~8		100	165	48	2.3

SUS-6 NO~10NO

SUS - 6 NO - □ - □ - AC110 - □

- **SUS** — MODEL
- **6** — Pipe Size
  - 6 : 1/8"
  - 8 : 1/4"
  - 10 : 3/8"
- **□** — Coil
  - □ : Standard coi
  - D : Waterproof DIN COIL (under 130°C)
  - I : Waterproof COIL 2 wire type (under 130°C)
- **□** — Operating Fluid
  - □ : Standard (water, air)
  - G : Gas
  - LO : Light oil
  - VA : Vacuum
- **AC110** — Voltage
  - AC220V(50/60)Hz
  - AC110V(50/60)Hz
  - DC24V
- **□** — Thread
  - □ : Standard (BSPT or PT)
  - BSP : BSPP or PF
  - NPT : NPT

NO

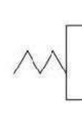

PRODUCT DESCRIPTION

- SUS-NO series is direct-acting, conductive, and normally open (NO) 2/2 way solenoid valve.
- Able to be operated directly without pressure
- Availability of fluid type: water, air, light fuel, gas, vacuum
- Acceptable for customize Viton (130℃) , Silicone (130℃) for plug

CAUTIONS:

- Before pipelining, the pipe line must be very clean without any contaminants or any other things not ought to be existed.
- To prolong the life time of the product, Y-type filter at the front end of solenoid valve.
- AC voltage tolerance: ± 10%; DC voltage tolerance: ± 1%
- It should be installed horizontally; vertical installation is not advisable.

Not Suitalbe For Fluid As Below:

- Liquid status when it is high temperature solid status when cool.
- Corrosive fluid
- Viscosity over 50cst

MATERIAL:

PARTS	Coil	Tube	Spring	Core	Plug	O-ring	Valve body
MATERIAL	Special copper wire (H class)	Stainless steel	Stainless steel	Stainless steel	VITON	NBR	Stainless steel

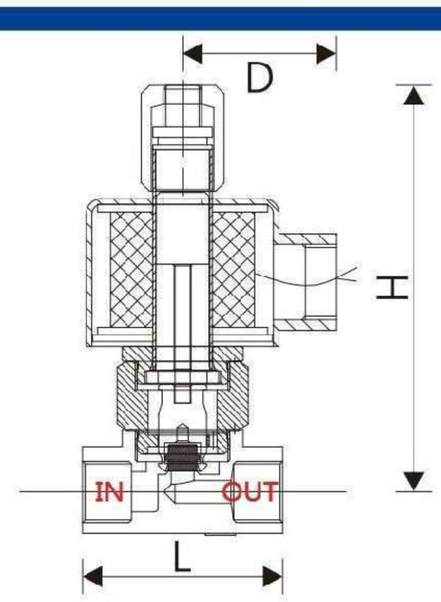

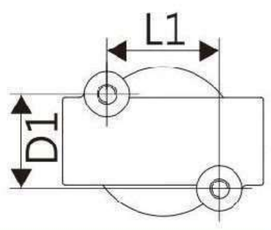

	L1	D1	M
SUS-6NO	23	19.3	M4x0.7
SUS-8NO	23	19.3	M4x0.7
SUS-10NO	20	21	M5x0.8

SPECIFICATION

MODEL	Waterproof DIN/flying lead Coil	NASS DIN Coil (IP65)	PIPE SIZE	CV	ORIFICE	FLUID TEMP. (°C)	Operating Pressure kgf / cm² (bar)					Vacuum (Torr)	Dimension (mm)			Weight (kg)
							Water	Air	Steam	Light oil	Gas		L	H	D	
SUS-6 NO			1/8"	0.23	2.5mm	-5°C ~ +130°C	0~7	0~7		0~7	0~7	$0\sim10^{-3}$	41	87	21.5	0.34
SUS-8 NO			1/4"	0.23	2.5mm	-5°C ~ +130°C	0~7	0~7		0~7	0~7	$0\sim10^{-3}$	41	87	21.5	0.33
SUS-10 NO	●		3/8"	0.58	4mm	-5°C ~ +130°C	0~10	0~10		0~7	0~10	$0\sim10^{-3}$	53	105	48	0.54

SUW-15NO~50NO

SUW - 15 NO- □ - □ - AC110 - □

- **SUW** — MODEL
- **15** — Pipe Size
  - 15 : 1/2"
  - 20 : 3/4"
  - 25 : 1"
  - 35 : 1 1/4"
  - 40 : 1 1/2"
  - 50 : 1/2"
- **□** — Coil
  - □ : Standard coi
  - D : Waterproof DIN COIL (under 130°C)
  - I : Waterproof COIL 2 wire type (under 130°C)
- **□** — Operating Fluid
  - □ : Standard (water, air)
  - G : Gas
  - LO : Light oil
  - VA : Vacuum
- **AC110** — Voltage
  - AC220V(50/60)Hz
  - AC110V(50/60)Hz
  - DC24V
- **□** — Thread
  - □ : Standard (BSPT or PT)
  - BSP : BSPP or PF
  - NPT : NPT

NO

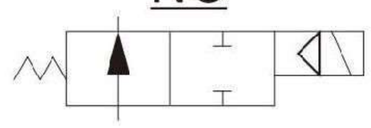

PRODUCT DESCRIPTION

- SUW-NO series is direct, multiplex, connected diaphragm, conductive and normally open (NO) 2/2 way solenoid valve.
- Able to operated directly under low pressure
- Availability of fluid type: water, air, light oil, gas, vacuum
- Acceptable for customize Viton (130℃) , Silicone (130℃) and EPDM (130℃) for plug and diaphragm

CAUTIONS:

- Before pipelining, the pipe line must be very clean without any contaminants or any other things not ought to be existed.
- To prolong the life time of the product, Y-type filter at the front end of solenoid valve.
- AC voltage tolerance: ± 10%; DC voltage tolerance: ± 1%
- It should be installed horizontally; vertical installation is not advisable.

Not Suitalbe For Fluid As Below:

- Liquid status when it is high temperature solid status when cool.
- Corrosive fluid
- Viscosity over 20cst

MATERIAL:

PARTS	Coil	Tube	Spring	Core	Plug	Diaphragm	Valve body
MATERIAL	Special copper wire (H class)	Stainless steel	Stainless steel	Stainless steel	NBR	NBR	Stainless steel

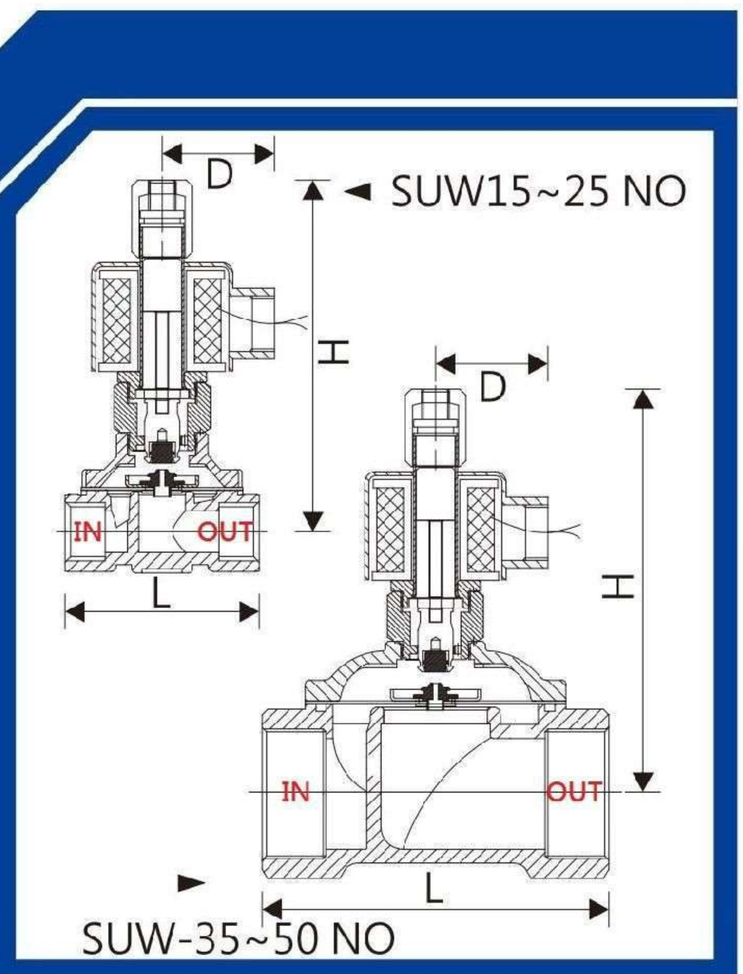

Normally Open Type

SPECIFICATION

MODEL	Waterproof DIN/flying lead Coil	NASS DIN Coil (IP65)	PIPE SIZE	CV	ORIFICE	FLUID TEMP. (°C)	Operating Pressure kgf / cm² (bar)					Vacuum (Torr)	Dimension (mm)			Weight (kg)
							Water	Air	Steam	Light oil	Gas		L	H	D	
SUW-15 NO	●		1/2"	4.5	15mm	-5°C ~ +80°C	0~5	0~7		0~5	0~7	$0\sim10^{-3}$	70	126	48	1
SUW-20 NO	●		3/4"	8.6	20mm	-5°C ~ +80°C	0~5	0~7		0~5	0~7	$0\sim10^{-3}$	76	132	48	1.1
SUW-25 NO	●		1"	12	25mm	-5°C ~ +80°C	0~5	0~7		0~5	0~7	$0\sim10^{-3}$	100	139	48	1.65
SUW-35 NO	●		1 1/4"	24	35mm	-5°C ~ +80°C	0~5	0~7		0~5	0~7	$0\sim10^{-3}$	123	140	48	2.5
SUW-40 NO	●		1 1/2"	28	40mm	-5°C ~ +80°C	0~5	0~7		0~5	0~7	$0\sim10^{-3}$	123	140	48	2.7
SUW-50 NO	●		2"	48	50mm	-5°C ~ +80°C	0~5	0~7		0~5	0~7	$0\sim10^{-3}$	167	150	48	4.73

SUS-15NO~50NO

SUS - 15 NO- □ - □ - AC110 - □

- MODEL
- Pipe Size
  - 15 : 1/2"
  - 20 : 3/4"
  - 25 : 1"
  - 35 : 1 1/4"
  - 40 : 1 1/2"
  - 50 : 2"
- Coil
  - □ : Standard coi
  - D : Waterproof DIN COIL (under 130°C)
  - I : Waterproof COIL 2 wire type (under 130°C)
- Operating Fluid
  - □ : Standard (Water, air)
  - LO : Light oil
- Voltage
  - AC220V(50/60)Hz
  - AC110V(50/60)Hz
  - DC24V
- Thread
  - □ : Standard (BSPT or PT)
  - BSP : BSPP or PF
  - NPT : NPT

NO

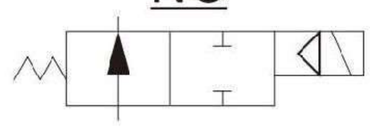

PRODUCT DESCRIPTION

- SUS-NO series is multiplex, pilot operated piston, conductive and normally open (NO) 2/2 way solenoid valve.
- Specially suitable for frequently operated
- Availability of fluid type: water, air, steam, light oil
- Acceptable for customize Viton , Silicone and EPDM for plug

CAUTIONS:

- Minimum pressure to close : over 0.5kgf-cm^2
- Before pipelining, the pipe line must be very clean without any contaminants or any other things not ought to be existed.
- To prolong the life time of the product, Y-type filter at the front end of solenoid valve.
- AC voltage tolerance: ± 10%; DC voltage tolerance: ± 1%
- It should be installed horizontally; vertical installation is not advisable.

Not Suitalbe For Fluid As Below:

- Liquid status when it is high temperature solid status when cool.
- Corrosive fluid
- Viscosity over 20 cst

MATERIAL:

PARTS	Coil	Tube	Spring	Core	Plug	Piston Spring	Piston	Piston plug	Valve body
MATERIAL	Special copper wire (H class)	Stainless steel	Stainless steel	Stainless steel	VITON	Stainless steel	Stainless steel	PTFE	Stainless steel

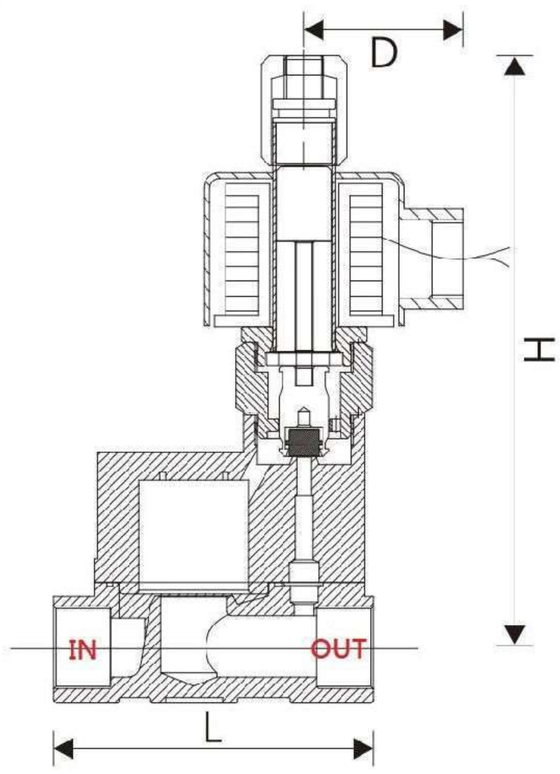

SPECIFICATION

MODEL	Waterproof DIN/flying lead Coil	NASS DIN Coil (IP65)	PIPE SIZE	CV	ORIFICE	FLUID TEMP. (°C)	Operating Pressure kgf / cm^2 (bar)					Dimension (mm)			Weight (kg)
							Water	Air	Steam	Light oil	Gas	L	H	D	
SUS-15 NO	●		1/2"	4.0	17mm	-5°C ~ +130°C	0.5~10	0.5~10		0.5~8		84	147	48	1.52
SUS-20 NO	●		3/4"	6.0	17mm	-5°C ~ +130°C	0.5~10	0.5~10		0.5~8		84	151	48	1.58
SUS-25 NO	●		1"	12	22mm	-5°C ~ +130°C	0.5~10	0.5~10		0.5~8		98	162	48	2
SUS-35 NO	●		1 1/4"	18	30mm	-5°C ~ +130°C	1~10	1~10		0.5~8		123	173	48	2.8
SUS-40 NO	●		1 1/2"	22	30mm	-5°C ~ +130°C	1~10	1~10		0.5~8		123	175	48	2.9
SUS-50 NO	●		2"	48	50mm	-5°C ~ +130°C	1~8	1~8		0.5~8		167	203	48	5.7

SUW-80FNO

SUW - 80 F NO - □ - AC110 - □

- SUW: MODEL
- 80: Pipe Size — 80 : 3"
- □: Operating Fluid — □ : Standard (water, air); LO : Light oil
- AC110: Voltage — AC220V(50/60)HZ, AC110V(50/60)HZ, DC24V
- □: Flange End — JIS10K

NO

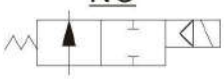

PRODUCT DESCRIPTION

- SUW-FNO series is multiplex, pilot operated piston, conductive and normally open (NO) 2/2 way solenoid valve.
- Availability of fluid type: water, air, light oil

CAUTIONS:

- Minimum pressure to close : over 0.5kgf-cm^2
- Before pipelining, the pipe line must be very clean without any contaminants or any other things not ought to be existed.
- To prolong the life time of the product, Y-type filter at the front end of solenoid valve.
- AC voltage tolerance: ± 10%; DC voltage tolerance: ± 1%
- It should be installed horizontally; vertical installation is not advisable.

Not Suitalbe For Fluid As Below:

- Liquid status when it is high temperature solid status when cool.
- Corrosive fluid
- Viscosity over 20cst

MATERIAL:

PARTS	Coil	Tube	Spring	Core	Plug	Diaphragm	Valve body
MATERIAL	Special copper wire (H class)	Stainless steel	Stainless steel	Stainless steel	NBR	NBR	Stainless steel

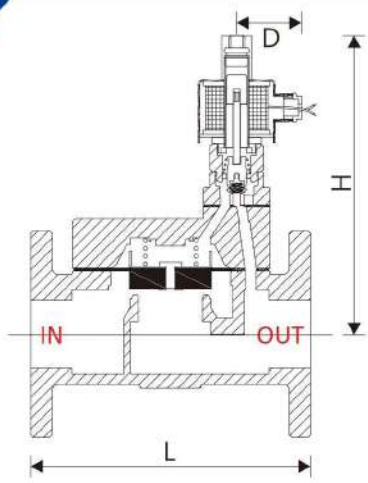

SPECIFICATION

MODEL	Waterproof DIN/flying lead Coil	NASS DIN Coil (IP65)	PIPE SIZE	CV	ORIFICE	FLUID TEMP. (°C)	Operating Pressure kgf / cm^2 (bar)					Dimension (mm)			Weight (kg)
							Water	Air	Steam	Light oil	Gas	L	H	D	
SUW-80F NO			3"	100	80mm	-5°C ~ +80°C	0.5~8	0.5~8		0.5~5		240	205	58	16

SUS-80FNO

SUSF - 80 F NO - □ - AC110 - □

- SUSF: MODEL
- 80: Pipe Size — 80 : 3"
- □: Operating Fluid — □ : Standard (Water, air); LO : Light oil
- AC110: Voltage — AC220V(50/60)HZ, AC110V(50/60)HZ, DC24V
- □: Flange End — JIS10K

NO

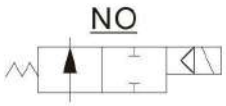

PRODUCT DESCRIPTION

- SUS-FNO series is multiplex, pilot operated piston, conductive and normally open (NO) 2/2 way solenoid valve.
- Availability of fluid type: water, air, light oil

CAUTIONS:

- Minimum pressure to close : over 1kgf-cm^2
- Before pipelining, the pipe line must be very clean without any contaminants or any other things not ought to be existed.
- To prolong the life time of the product, Y-type filter at the front end of solenoid valve.
- AC voltage tolerance: ± 10%; DC voltage tolerance: ± 1%
- It should be installed horizontally; vertical installation is not advisable.

Not Suitalbe For Fluid As Below:

- Liquid status when it is high temperature solid status when cool.
- Corrosive fluid
- Viscosity over 20cst

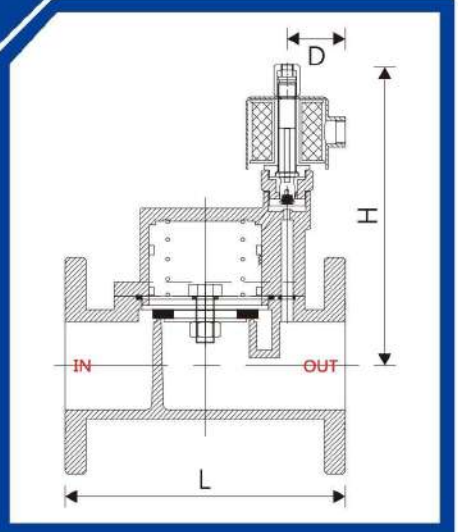

MATERIAL:

PARTS	Coil	Tube	Spring	Core	Plug	Piston	Piston plug	Valve body
MATERIAL	Special copper wire (H class)	Stainless steel	Stainless steel	Stainless steel	VITON	Stainless steel	PTFE	Stainless steel

SPECIFICATION

MODEL	Waterproof DIN/flying lead Coil	NASS DIN Coil (IP65)	PIPE SIZE	CV	ORIFICE	FLUID TEMP. (°C)	Operating Pressure kgf / cm^2 (bar)					Dimension (mm)			Weight (kg)
							Water	Air	Steam	Light oil	Gas	L	H	D	
SUS-80F NO			3"	100	80mm	-5°C ~ +130°C	1~8	1~8		1~8		240	252	58	20

US-35F-NO~100F-NO

US - 35 F - NO - □ - □ - AC110 - □

- **US** — MODEL
- **35** — Pipe Size
  - 35 : 1 1/4"
  - 40 : 1 1/2"
  - 50 : 2"
  - 65 : 2 1/2"
  - 80 : 3"
  - 100 : 4"
- **□** — Coil
  - □ : Standard coi
  - D : Waterproof DIN COIL (under 130°C)
  - I : Waterproof COIL 2 wire type (under 130°C)
- **□** — Operating Fluid
  - □ : Standard (Water, air)
  - LO : Light oil
- **AC110** — Voltage
  - AC220V(50/60)Hz
  - AC110V(50/60)Hz
  - DC24V
- **□** — Flange End
  - □ : Standard (JIS 10K)
  - ANSI 150LB
  - PN 16

NO

PRODUCT DESCRIPTION

- USF-NO series is multiplex, pilot operated piston, conductive and normally open (NO) 2/2 way solenoid valve.
- Availability of fluid type: water, air, light oil
- Acceptable for customize Viton (130℃) , Silicone (130℃) and EPDM (130℃) for plug

CAUTIONS:

- Minimum pressure to open: over 0.5kgf-cm^2
- Before pipelining, the pipe line must be very clean without any contaminants or any other things not ought to be existed.
- To prolong the life time of the product, Y-type filter at the front end of solenoid valve.
- AC voltage tolerance: ± 10%; DC voltage tolerance: ± 1%
- It should be installed horizontally; vertical installation is not advisable.

Not Suitalbe For Fluid As Below:

- Liquid status when it is high temperature solid status when cool.
- Corrosive fluid
- Viscosity over 20cst

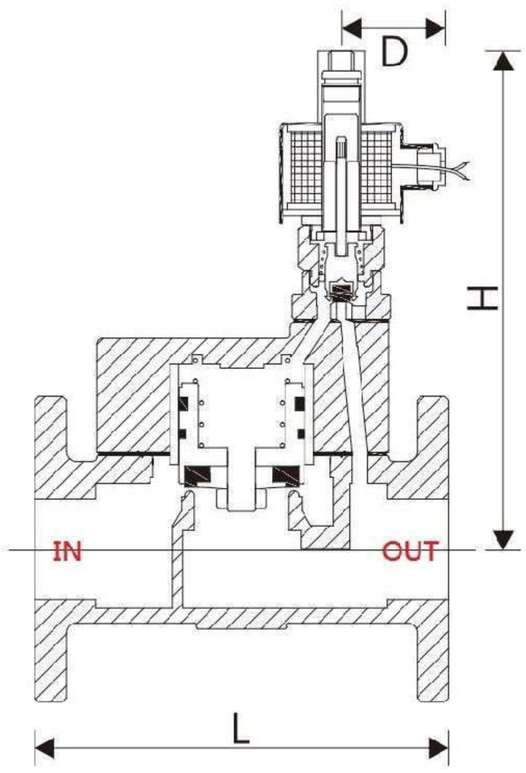

MATERIAL:

PARTS	Coil	Tube	Spring	Core	Plug	Piston Spring	Piston plug	Valve body
MATERIAL	Special copper wire (H class)	Stainless steel	Stainless steel	Stainless steel	VITON	Stainless steel	PTFE	Cast Iron (FC-20)

SPECIFICATION

MODEL	Waterproof DIN/flying lead Coil	NASS DIN Coil (IP65)	PIPE SIZE	CV	ORIFICE	FLUID TEMP. (°C)	Operating Pressure kgf / cm^2 (bar)					Dimension (mm)			Weight (kg)
							Water	Air	Steam	Light oil	Gas	L	H	D	
US-35F-NO	●		1 1/4"	22	35mm	-5°C ~ +130°C	1~8	1~8		1~8		200	220	48	10.9
US-40F-NO	●		1 1/2"	30	40mm	-5°C ~ +130°C	1~8	1~8		1~8		200	220	48	11.1
US-50F-NO	●		2"	40	50mm	-5°C ~ +130°C	1~8	1~8		1~8		210	233	48	13.4
US-65F-NO	●		2 1/2"	68	65mm	-5°C ~ +130°C	1~8	1~8		1~8		240	240	48	19.4
US-80F-NO	●		3"	100	80mm	-5°C ~ +130°C	1~8	1~8		1~8		300	259	48	27.2
US-100F-NO	●		4"	175	100mm	-5°C ~ +130°C	1~8	1~8		1~8		340	274	48	38.9

UW-35F-NO~100F-NO

UW - 35 F - NO - □ - □ - AC110 - □

MODEL

Pipe Size

35 : 1 1/4"
40 : 1 1/2"
50 : 2"
65 : 2 1/2"
80 : 3"
100 : 4"

Coil

□ : Standard coi
D : Waterproof DIN COIL (under 130°C)
I : Waterproof COIL 2 wire type (under 130°C)

Operating Fluid

□ : Standard (water, air)
LO : Light oil

Voltage

AC220V(50/60)Hz
AC110V(50/60)Hz
DC24V

Flange End

□ : Standard (JIS 10K)
ANSI 150LB
PN 16

NO

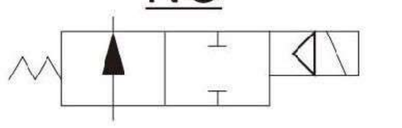

PRODUCT DESCRIPTION

- UWF-NO series is multiplex, pilot operated piston, conductive and normally open (NO) 2/2 way solenoid valve.
- Availability of fluid type: water, air, light oil
- Acceptable for customize Viton , Silicone and EPDM for plug

CAUTIONS:

- Minimum pressure to open: over 0.5kgf-cm^2
- Before pipelining, the pipe line must be very clean without any contaminants or any other things not ought to be existed.
- To prolong the life time of the product, Y-type filter at the front end of solenoid valve.
- AC voltage tolerance: ± 10%; DC voltage tolerance: ± 1%
- It should be installed horizontally; vertical installation is not advisable.

Not Suitalbe For Fluid As Below:

- Liquid status when it is high temperature solid status when cool.
- Corrosive fluid
- Viscosity over 20cst

MATERIAL:

PARTS	Coil	Tube	Spring	Core	Plug	Diaphragm	Valve body
MATERIAL	Special copper wire (H class)	Stainless steel	Stainless steel	Stainless steel	NBR	NBR	Cast Iron (FC-20)

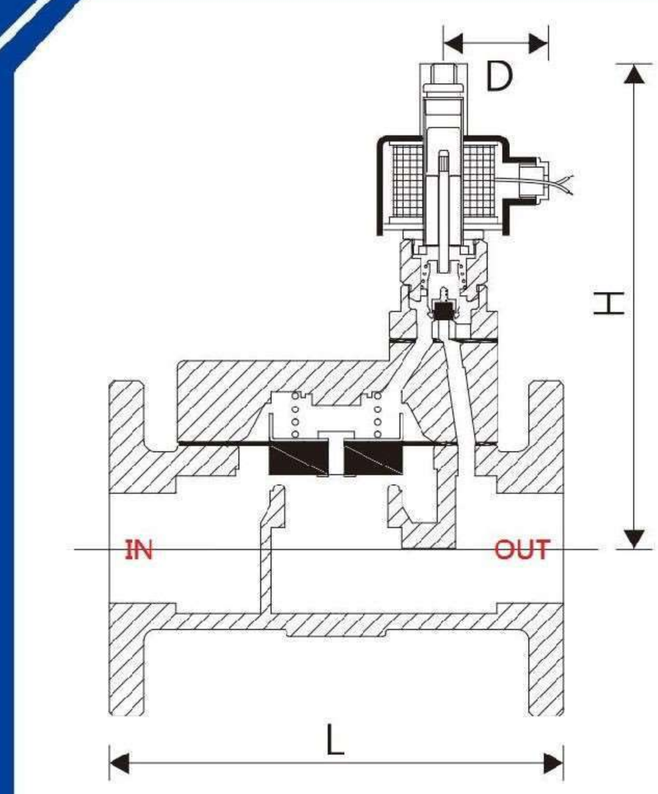

Normally Open Type

SPECIFICATION

MODEL	Waterproof DIN/flying lead Coil	NASS DIN Coil (IP65)	PIPE SIZE	CV	ORIFICE	FLUID TEMP. (°C)	Operating Pressure kgf / cm^2 (bar)					Dimension (mm)			Weight (kg)
							Water	Air	Steam	Light oil	Gas	L	H	D	
UW-35F-NO	●		1 1/4"	22	35mm	-5°C ~ +80°C	0.5~8	0.5~8		0.5~5		200	195	48	9.1
UW-40F-NO	●		1 1/2"	30	40mm	-5°C ~ +80°C	0.5~8	0.5~8		0.5~5		200	195	48	9.8
UW-50F-NO	●		2"	40	50mm	-5°C ~ +80°C	0.5~8	0.5~8		0.5~5		210	208	48	11.5
UW-65F-NO	●		2 1/2"	68	65mm	-5°C ~ +80°C	0.5~8	0.5~8		0.5~5		240	213	48	15.8
UW-80F-NO	●		3"	102	80mm	-5°C ~ +80°C	0.5~8	0.5~8		0.5~5		300	222	48	21
UW-100F-NO	●		4"	180	100mm	-5°C ~ +80°C	0.5~8	0.5~8		0.5~5		340	238	48	31.9

Normally Open Type-Optional Items

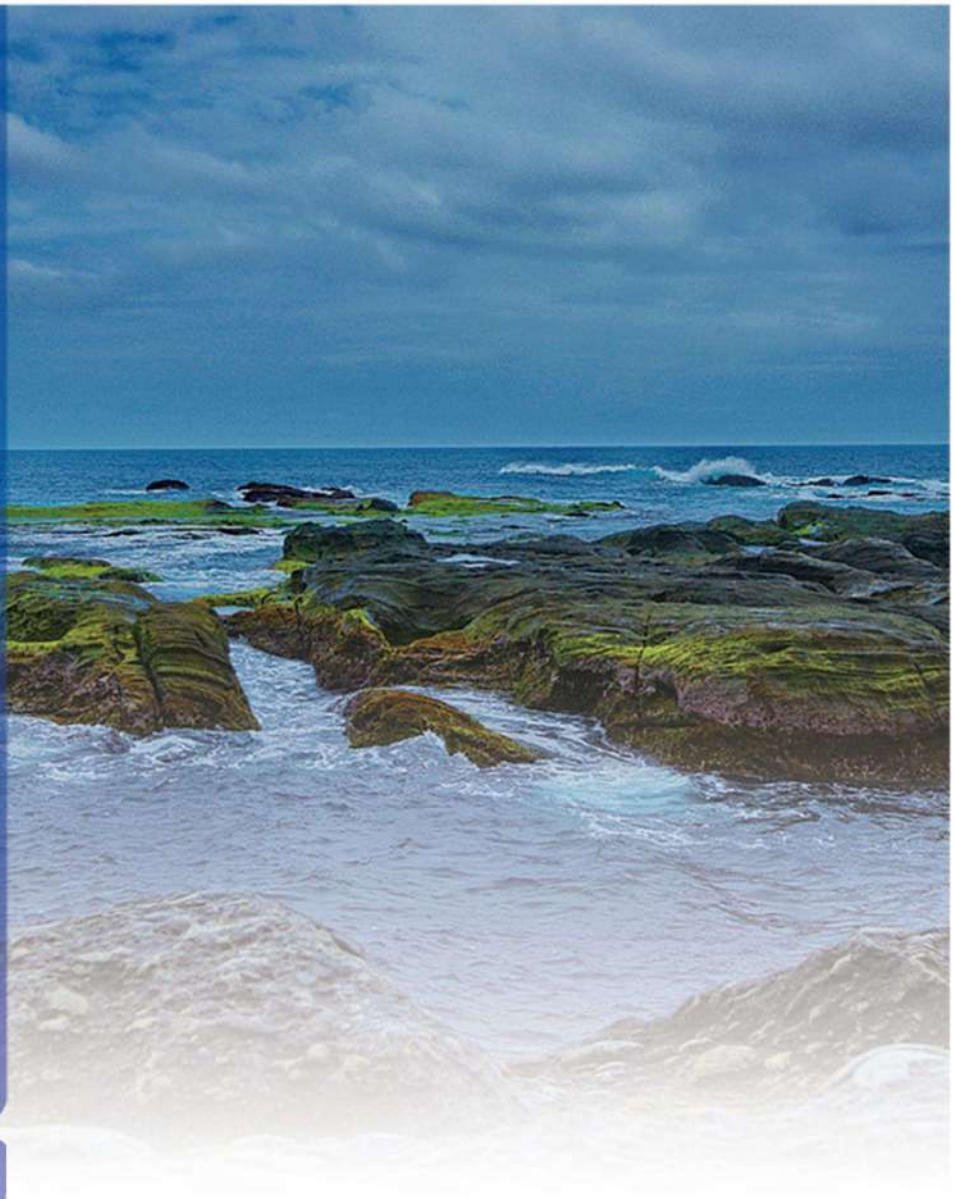

- Multiplex, Pilot Operated Piston Diagram
- Multiplex, Pilot Operated Diaphragm Diagram
- Direct-Acting type Diagram
- Direct-Multiplex, Connected Diaphragm Diagram

Optional Items

Please confirm the solenoid valve model number, and take the Coil Matching Table for reference.
Please always feel free to contact us for any further questions.

Coil set

Piston, The spring set

Tube set

Diaphragm, Connected spring set

Pintle, Pintle seat

Core, Setting seat set

Multiplex, Pilot Operated Piston Diagram

Normally open (N/O) series

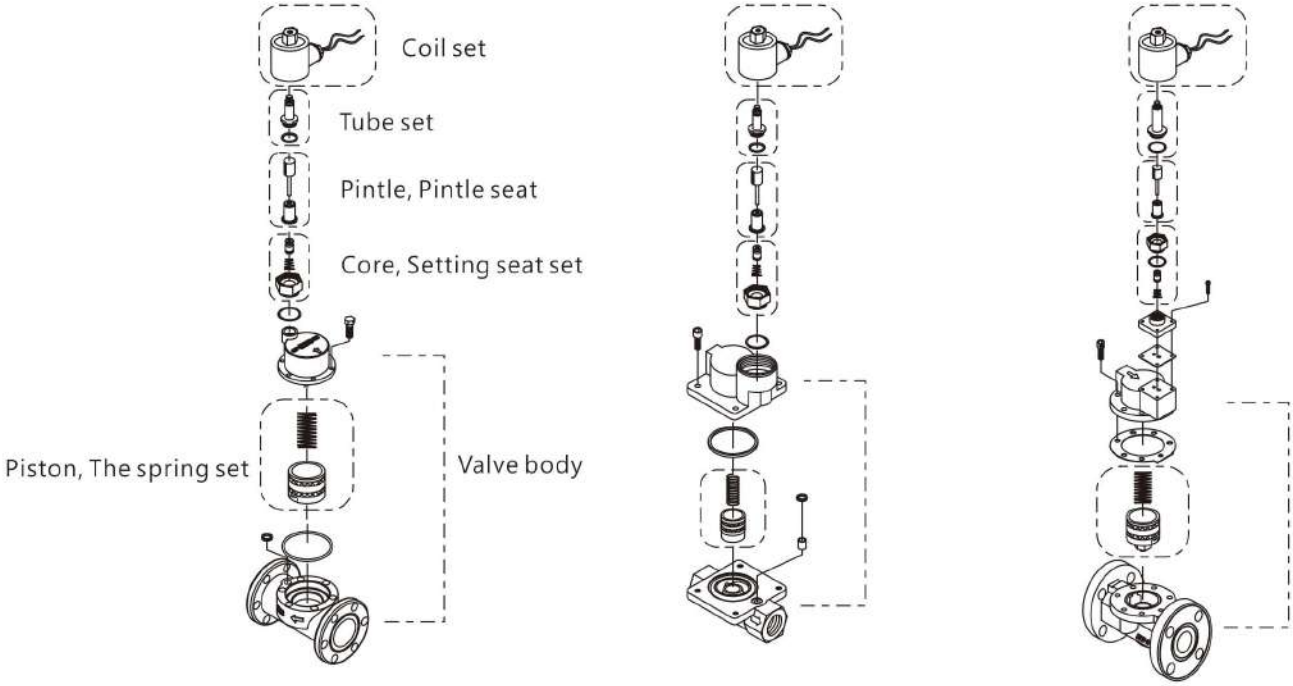

Multiplex, Pilot Operated Diaphragm Diagram

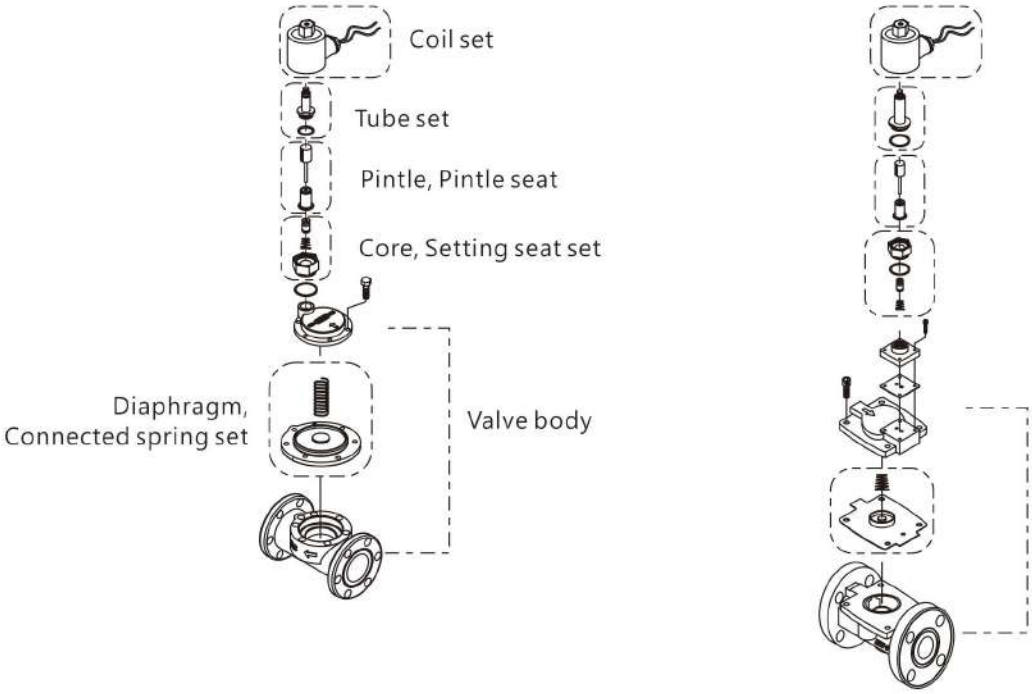

Direct-Acting type Diagram

Normally open (N/O) series

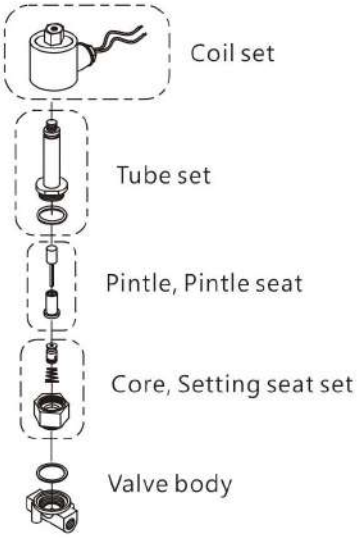

Direct-Multiplex, Connected Diaphragm Diagram

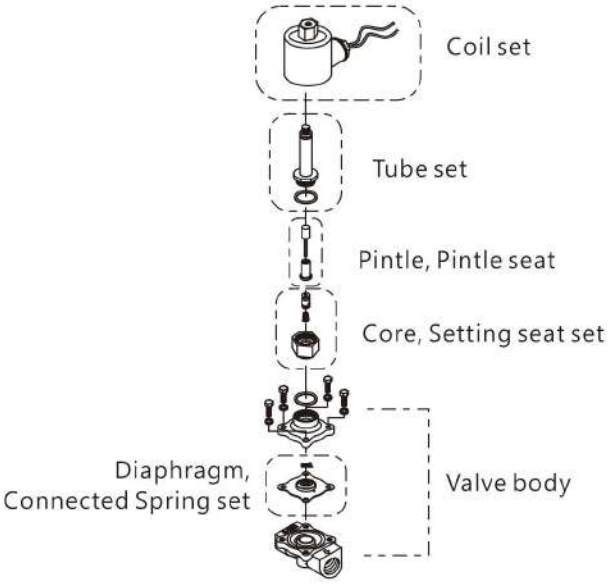

Solenoid Valve-Explosion Proof Series

- Solenoid Valve-Explosion Proof Series
- Solenoid Coil system 13 ATEX
- SKS-15~25
- SKW-15~25
- PKS-15~25
- PKW-10~50

Solenoid Valve-Explosion Proof Series

- Explosion proof solenoid valve is installed with NASS coil made in Germany and it is suitable for potentially explosive atmospheres
- NASS SYSTEM13 series coil has a special element, it is applicable for hazardous or potentially explosive atmospheres
- PTB (German national inspection combined standard grade) certification, in line with European Union (EU) 94/9 / EG regulations in DIN EN60079, DIN VDE0179 and IEC60079 safety regulations

Physikalisch-Technische Bundesanstalt PTB

Braunschweig und Berlin

(1) **EC-TYPE-EXAMINATION CERTIFICATE**
(Translation)

(2) Equipment and Protective Systems Intended for Use in Potentially Explosive Atmospheres - **Directive 94/9/EC**

(3) EC-type-examination Certificate Number:

PTB 11 ATEX 2027 X

(4) Equipment: Solenoid, type 0519

(5) Manufacturer: nass magnet GmbH

(6) Address: Eckenerstraße 4-8, 30179 Hannover, Germany

(7) This equipment and any acceptable variation thereto are specified in the schedule to this certificate and the documents therein referred to.

(8) The Physikalisch-Technische Bundesanstalt, notified body No. 0102 in accordance with Article 9 of the Council Directive 94/9/EC of 23 March 1994, certifies that this equipment has been found to comply with the Essential Health and Safety Requirements relating to the design and construction of equipment and protective systems intended for use in potentially explosive atmospheres, given in Annex II to the Directive.

The examination and test results are recorded in the confidential test report PTB Ex 12-20290.

(9) Compliance with the Essential Health and Safety Requirements has been assured by compliance with:
EN 60079-0:2009, EN 60079-7:2007, EN 60079-18:2009, EN 60079-31:2009

(10) If the sign "X" is placed after the certificate number, it indicates that the equipment is subject to special conditions for safe use specified in the schedule to this certificate.

(11) This EC-type-examination Certificate relates only to the design, examination and tests of the specified equipment in accordance to the Directive 94/9/EC. Further requirements of the Directive apply to the manufacturing process and supply of this equipment. These are not covered by this certificate.

(12) The marking of the equipment shall include the following:

II 2 G Ex e mb IIC T4,T6 Gb and
II 2 D Ex tb mb IIIC T130°C,T80°C Db IP 65 or IP67

Zertifizierungssektor Explosionsschutz
On behalf of PTB:

Braunschweig, March 30, 2012

Dr.-Ing. U. Johannsmeyer
Direktor und Professor

sheet 1/4

EC-type-examination Certificates without signature and official stamp shall not be valid. The certificates may be circulated only without alteration. Extracts or alterations are subject to approval by the Physikalisch-Technische Bundesanstalt.
In case of dispute, the German text shall prevail.

Physikalisch-Technische Bundesanstalt • Bundesallee 100 • 38116 Braunschweig • GERMANY

Solenoid Coil system 13 ATEX

WITH TERMINAL BOX

Width:	52 mm
Protection by encaps:	Ⓔx II 2 G Ex e mb IIC T4, T6 Gb
	Ⓔx II 2D Ex tb mb IIIC T130 °C, T80 °C Db IP 65, IP 67
Connection type:	terminal box
Moulding material:	thermoplastic

General Data

Voltage tolerance:	±10%
Ambient temperature:	-40°C bis + 50 °C/+ 60 °C
Relative duty cycle:	100%

Insulation class of insulating materials
According to DIN VDE 0580: F
Degree of protection: IP 65/IP 67
Type examination certificate: PTB 11 ATEX 2027 X
Imprint: nass magnet (customer imprint possible)

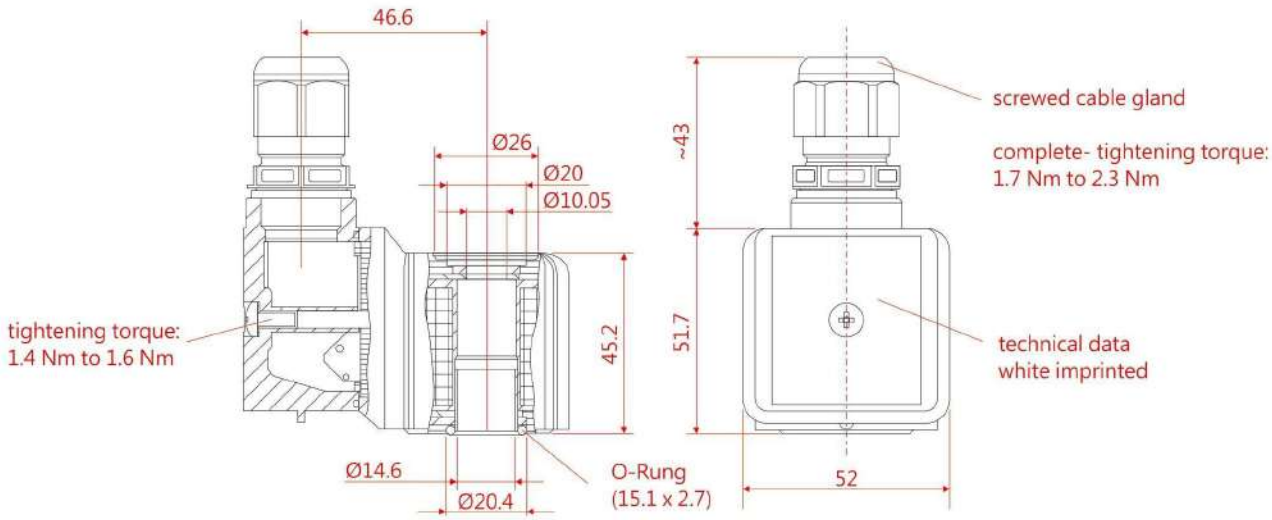

Cautions

※ After the wiring is completed, be sure the cable gland has been tightened, tightening torque is 1.7Nm to 2.3Nm

※ After the wiring is completed, be sure to tighten the lid, tightening torque is 1.4Nm to 1.6Nm

SKS-15~50

SKS - 15 - □ - □ - AC110 - □

MODEL

Pipe Size
15 : 1/2"
20 : 3/4"
25 : 1"
35 : 1 1/4"
40 : 1 1/2"
50 : 2"

Coil
NASS DIN COIL
Ex Ii2 G Ex e mb IIC T4 Gb

Operating Fluid
□ : Standard (water, air)
LO : Light oil

Voltage
AC220V(50/60)Hz
AC110V(50/60)Hz
AC24V(50/60)Hz
DC24V

Thread
□ : Standard (BSPT or PT)
BSP : BSPP or PF
NPT : NPT

NC

PRODUCT DESCRIPTION

- SKS series is multiplex, pilot operated piston, conductive, and normally closed (NC)2/2 way solenoid valve.
- Explosion proof protection level: EX II2 G Ex e mb IIC T4 Gb
- IP 67
- Specially suitable for frequent operation
- Availability of fluid type: water, air, light oil

CAUTIONS:

- Minimum pressure to open: over 0.5kgf-cm^2
- Before pipelining, the pipe line must be very clean without any contaminants or any other things not ought to be existed.
- To prolong the life time of the product, Y-line filter should be installed in the front end of solenoid valve.
- Ambient temperature should be under 70℃
- Operating temperature should be under 60℃
- AC voltage tolerance: ± 10%; DC voltage tolerance: ± 1%
- It should be installed horizontally; vertical installation is not advisable.

Not Suitalbe For Fluid As Below:

- Liquid status when it is high temperature solid status when cool.
- Corrosive fluid
- Viscosity over 20cst

MATERIAL:

PARTS	Coil	Tube	Spring	Core	Plug	Piston Spring	Piston	Piston plug	Valve body
MATERIAL	NASS ex-proof DIN COIL	Stainless steel	Stainless steel	Stainless steel	VITON	Stainless steel	Stainless steel	PTFE	Stainless steel

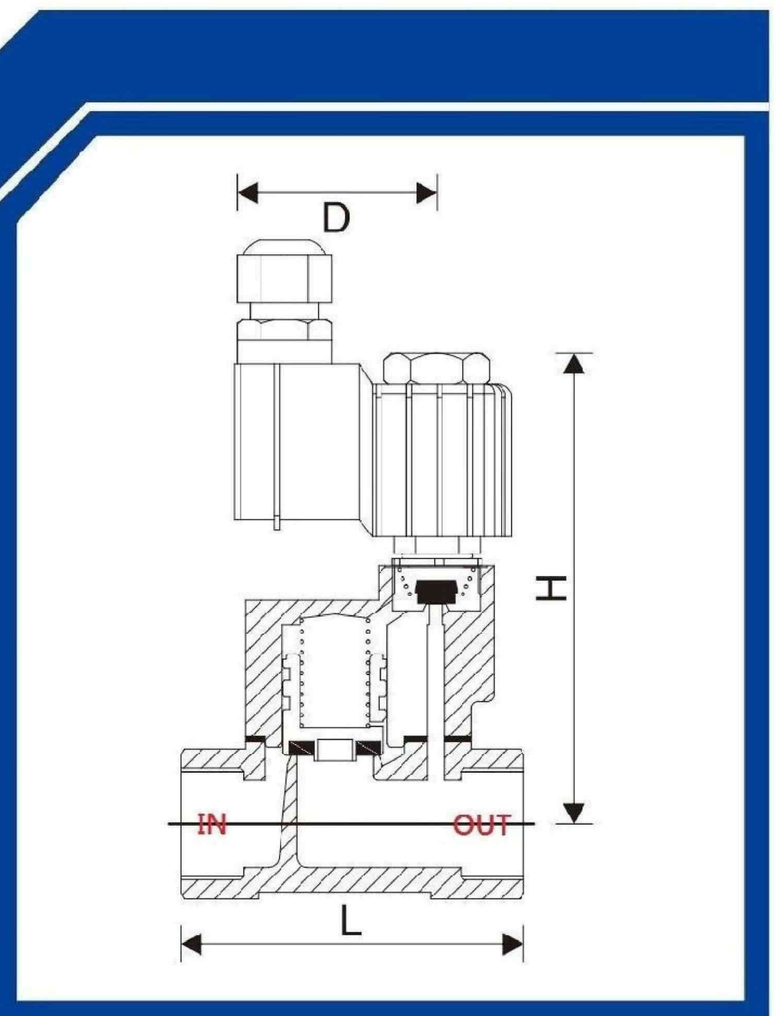

SPECIFICATION

MODEL	Waterproof DIN/flying lead Coil	NASS DIN Coil (IP65)	PIPE SIZE	CV	ORIFICE	FLUID TEMP. (°C)	Operating Pressure kgf / cm^2 (bar)					Dimension (mm)			Weight (kg)
							Water	Air	Steam	Light oil	Gas	L	H	D	
SKS-15			1/2"	4.0	17mm	-5°C ~ +70°C	0.5~10	0.5~10				84	170	62	1.61
SKS-20			3/4"	6.0	17mm	-5°C ~ +70°C	0.5~10	0.5~10				84	171	62	1.68
SKS-25			1"	12	22mm	-5°C ~ +70°C	0.5~10	0.5~10				98	181	62	2.08
SKS-35			1 1/4"	18	30mm	-5°C ~ +70°C	3~10	3~10				123	197	62	2.85
SKS-40			1 1/2"	22	30mm	-5°C ~ +70°C	3~10	3~10				123	200	62	2.95
SKS-50			2"	48	50mm	-5°C ~ +70°C	3~10	3~10				167	230	62	5.68

SKW-15~50

SKW - 15 - □ - □ - AC110 - □

MODEL

Pipe Size
15 : 1/2"
20 : 3/4"
25 : 1"
35 : 1 1/4"
40 : 1 1/2"
50 : 2"

Coil
NASS DIN COIL
Ex Ii2 G Ex e mb IIC T4 Gb

Operating Fluid
□ : Standard (water, air)
G : Gas
LO : Light oil
VA : Vacuum

Voltage
AC220V(50/60)Hz
AC110V(50/60)Hz
AC24V(50/60)Hz
DC24V

Thread
□ : Standard (BSPT or PT)
BSP : BSPP or PF
NPT : NPT

NC

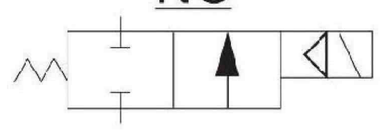

PRODUCT DESCRIPTION

- SKW series is direct, multiplex, connected diaphragm, conductive, and normally closed (NC)2/2 way solenoid valve.
- Explosion proof Protection Level: EX II2 G Ex e mb IIC T4 Gb
- IP 67
- Able to be operated directly under low pressure
- Availability of fluid type: water, air, light oil, gas, vacuum
- Acceptable for customization Viton , Silicone and EPDM for diaphragm

CAUTIONS:

- Before pipelining, the pipe line must be very clean without any contaminants or any other things not ought to be existed.
- To prolong the life time of the product, Y-line filter should be installed in the front end of solenoid valve.
- Ambient temperature should be under 70℃
- Operating temperature should be under 60℃
- AC voltage tolerance: ± 10%; DC voltage tolerance: ± 1%
- It should be installed horizontally; vertical installation is not advisable.

Not Suitalbe For Fluid As Below:

- Liquid status when it is high temperature; solid status when it is cool.
- Corrosive fluid
- Crystallized fluid, Ex: sea water
- Viscosity over 20cst

MATERIAL:

PARTS	Coil	Tube	Spring	Core	Plug	Diaphragm	Valve body
MATERIAL	NASS ex-proof DIN COIL	Stainless steel	Stainless steel	Stainless steel	Viton	NBR	Stainless steel

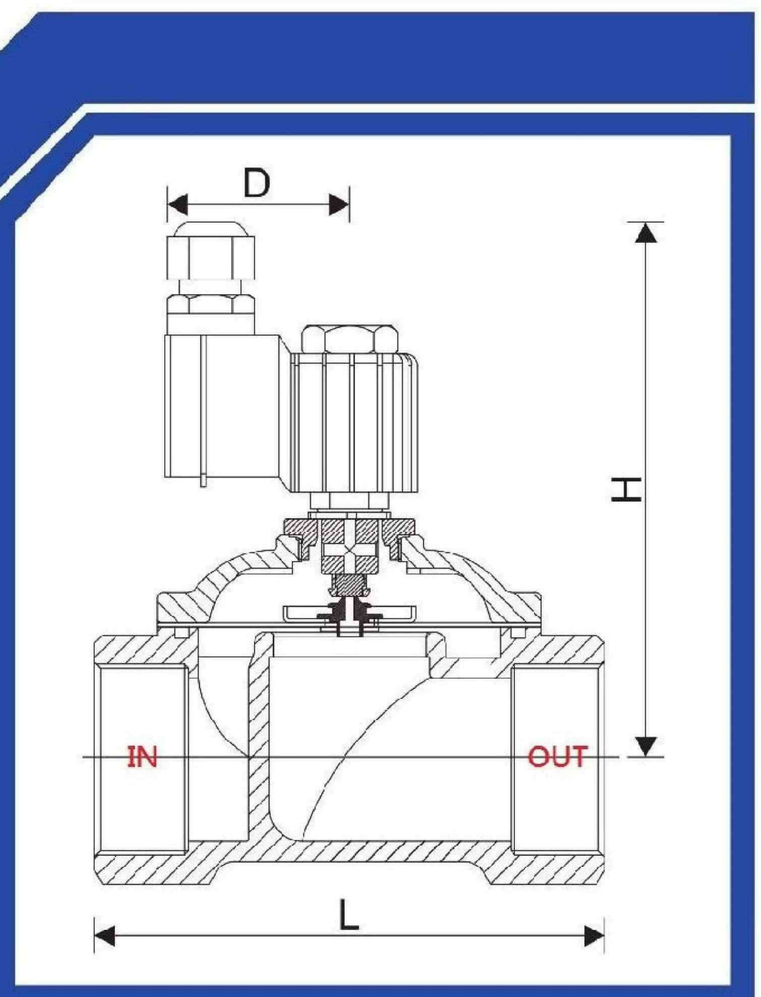

SPECIFICATION

MODEL	Waterproof DIN/flying lead Coil	NASS DIN Coil (IP65)	PIPE SIZE	CV	ORIFICE	FLUID TEMP. (℃)	Operating Pressure kgf / cm² (bar)					Vacuum (Torr)	Dimension (mm)			Weight (kg)
							Water	Air	Steam	Light oil	Gas		L	H	D	
SKW-15			1/2"	4.5	15mm	-5℃ ~ +70℃	0~5	0~7			0~7	$0\sim10^{-3}$	70	133	62	1.04
SKW-20			3/4"	8.6	20mm	-5℃ ~ +70℃	0~5	0~7			0~7	$0\sim10^{-3}$	76	140	62	1.12
SKW-25			1"	12	25mm	-5℃ ~ +70℃	0~5	0~7			0~7	$0\sim10^{-3}$	100	147	62	1.66
SKW-35			1 1/4"	24	35mm	-5℃ ~ +70℃	0~5	0~7			0~7	$0\sim10^{-3}$	123	144	62	2.37
SKW-40			1 1/2"	28	40mm	-5℃ ~ +70℃	0~5	0~7			0~7	$0\sim10^{-3}$	123	144	62	2.57
SKW-50			2"	48	50mm	-5℃ ~ +70℃	0~5	0~7			0~7	$0\sim10^{-3}$	167	157	62	4.62

PKS-15~25

PKS - 15 - □ - □ - AC110 - □

- **PKS** — MODEL
- **15** — Pipe Size
  - 15 : 1/2"
  - 20 : 3/4"
  - 25 : 1"
- **□** — Coil
  - NASS DIN COIL
  - Ex Ii2 G Ex e mb IIC T4 Gb
- **□** — Operating Fluid
  - □ : Standard (water, air)
  - LO : Light oil
- **AC110** — Voltage
  - AC220V(50/60)Hz
  - AC110V(50/60)Hz
  - AC24V(50/60)Hz
  - DC24V
- **□** — Thread
  - □ : Standard (BSPT or PT)
  - BSP : BSPP or PF
  - NPT : NPT

NC

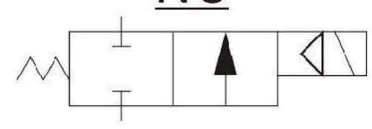

PRODUCT DESCRIPTION

- PKS series is multiplex, pilot operated piston, conductive, and normally closed (NC) 2/2 way solenoid valve.
- Explosion proof protection level: EX II2 G Ex e mb IIC T4 Gb
- IP 67
- Specially suitable for frequent operation
- Availability of fluid type: water, air, light oil

CAUTIONS:

- Minimum pressure to open: over 0.5kgf-cm^2
- Before pipelining, the pipe line must be very clean without any contaminants or any other things not ought to be existed.
- To prolong the life time of the product, Y-line filter should be installed in the front end of solenoid valve.
- Ambient temperature should be under 70℃
- Operating temperature should be under 60℃
- AC voltage tolerance: ± 10%; DC voltage tolerance: ± 1%
- It should be installed horizontally; vertical installation is not advisable.

Not Suitalbe For Fluid As Below:

- Liquid status when it is high temperature; solid status when it is cool.
- Corrosive fluid
- Crystallized fluid, Ex: ocean water
- Viscosity over 20cst

MATERIAL:

PARTS	Coil	Tube	Spring	Core	Plug	Piston Spring	Piston	Piston plug	Valve body
MATERIAL	NASS ex-proof DIN COIL	Stainless steel	Stainless steel	Stainless steel	VITON	Stainless steel	Brass	PTFE	Brass

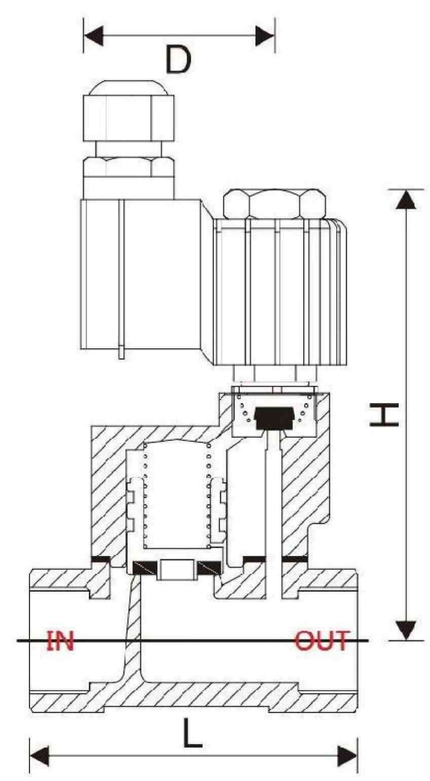

SPECIFICATION

MODEL	Waterproof DIN/flying lead Coil	NASS DIN Coil (IP65)	PIPE SIZE	CV	ORIFICE	FLUID TEMP. (°C)	Operating Pressure kgf / cm^2 (bar)					Dimension (mm)			Weight (kg)
							Water	Air	Steam	Light oil	Gas	L	H	D	
PKS-15			1/2"	4.0	17mm	-5°C ~ +70°C	0.5~10	0.5~10				82	155	62	1.55
PKS-20			3/4"	6.0	17mm	-5°C ~ +70°C	0.5~10	0.5~10				82	157	62	1.61
PKS-25			1"	12	22mm	-5°C ~ +70°C	0.5~10	0.5~10				100	172	62	2.36

PKW-10~50

PKW- 10 - □ - □ - AC110 - □

- **MODEL**
- **Pipe Size**
  - 10 : 3/8"
  - 15 : 1/2"
  - 20 : 3/4"
  - 25 : 1"
  - 35 : 1 1/4"
  - 40 : 1 1/2"
  - 50 : 2"
- **Coil**
  - NASS DIN COIL
  - Ⓔx Ii2 G Ex e mb IIC T4 Gb
- **Operating Fluid**
  - □ : Standard (water, air)
  - G : Gas
  - LO : Light oil
  - VA : Vacuum
- **Voltage**
  - AC220V(50/60)Hz
  - AC110V(50/60)Hz
  - AC24V(50/60)Hz
  - DC24V
- **Thread**
  - □ : Standard (BSPT or PT)
  - BSP : BSPP or PF
  - NPT : NPT

NC

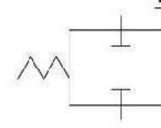

PRODUCT DESCRIPTION

- PKW series is direct, multiplex, connected diaphragm, conductive, and normally closed (NC) 2/2 way solenoid valve.
- Explosion proof Protection Level: EX II2 G Ex e mb IIC T4 Gb
- IP 67
- Able to be operated directly under low pressure
- Availability of fluid type: water, air, light oil, gas, vacuum
- Acceptable for customization Viton , Silicone and EPDM (only available for PKW-20 and PKW-25) for diaphragm

CAUTIONS:

- Before pipelining, the pipe line must be very clean without any contaminants or any other things not ought to be existed.
- To prolong the life time of the product, Y-line filter should be installed in the front end of solenoid valve.
- Ambient temperature should be under 70℃
- Operating temperature should be under 60℃
- AC voltage tolerance: ± 10%; DC voltage tolerance: ± 1%
- It should be installed horizontally; vertical installation is not advisable.

Not Suitalbe For Fluid As Below:

- Liquid status when it is high temperature; solid status when it is cool.
- Corrosive fluid
- Crystallized fluid, Ex: ocean water
- Viscosity over 20cst

MATERIAL:

PARTS	Coil	Tube	Spring	Core	Plug	Diaphragm	Valve body
MATERIAL	NASS ex-proof DIN COIL	Stainless steel	Stainless steel	Stainless steel	Viton	NBR	BRASS

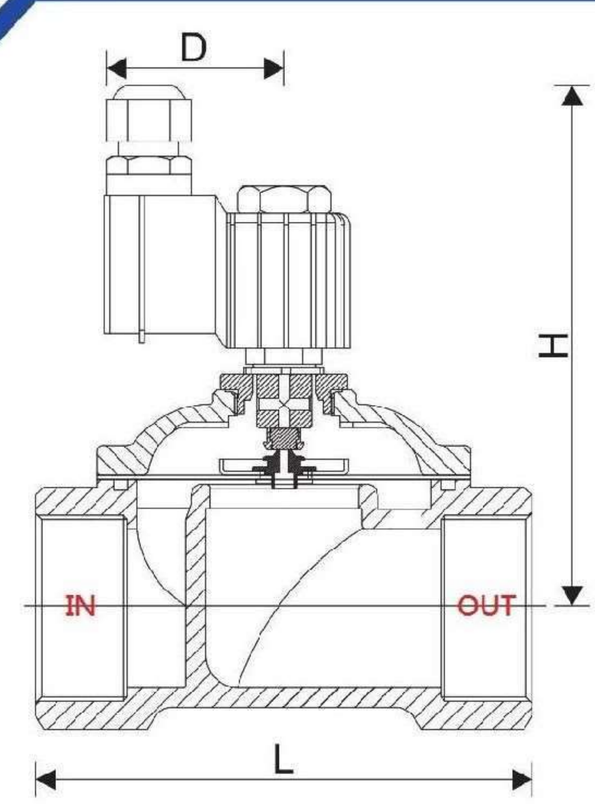

SPECIFICATION

MODEL	Waterproof DIN/flying lead Coil	NASS DIN Coil (IP65)	PIPE SIZE	CV	ORIFICE	FLUID TEMP. (°C)	Operating Pressure kgf / cm² (bar)					Vacuum (Torr)	Dimension (mm)			Weight (kg)
							Water	Air	Steam	Light oil	Gas		L	H	D	
PKW-10			3/8"	2.4	15mm	-5°C ~ +70°C	0~5	0~7			0~5	$0\sim10^{-3}$	70	133	62	1.05
PKW-15			1/2"	4.5	15mm	-5°C ~ +70°C	0~5	0~7			0~5	$0\sim10^{-3}$	70	133	62	1.04
PKW-20			3/4"	8.6	20mm	-5°C ~ +70°C	0~5	0~7			0~5	$0\sim10^{-3}$	73	140	62	1.16
PKW-25			1"	12	25mm	-5°C ~ +70°C	0~5	0~7			0~5	$0\sim10^{-3}$	100	147	62	1.76
PKW-35			1 1/4"	24	35mm	-5°C ~ +70°C	0~5	0~7			0~5	$0\sim10^{-3}$	130	178	62	3.39
PKW-40			1 1/2"	28	40mm	-5°C ~ +70°C	0~5	0~7			0~5	$0\sim10^{-3}$	130	183	62	3.49
PKW-50			2"	48	50mm	-5°C ~ +70°C	0~5	0~7			0~5	$0\sim10^{-3}$	165	191	62	5.08

Flow Rate Table

- Flow Rate Table. 1
- Flow Rate Table. 2
- Flow Rate Table. 3

Flow Rate Table . 1

UPS-15.SUS-15
P1=inlet press kg/cm² G
P2=outlet press kg/cm² G
Steam

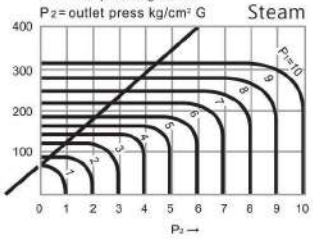

UPS-20.SUS-20
P1=inlet press kg/cm² G
P2=outlet press kg/cm² G
Steam

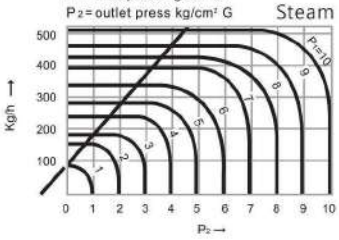

UPS-25.SUS-25
P1=inlet press kg/cm² G
P2=outlet press kg/cm² G
Steam

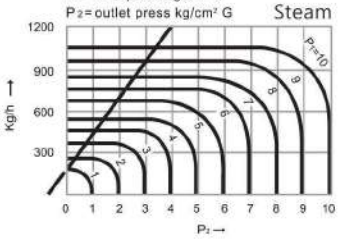

SUS-35
P1=inlet press kg/cm² G
P2=outlet press kg/cm² G
Steam

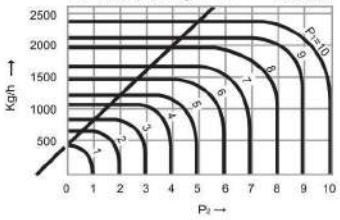

SUS-40
P1=inlet press kg/cm² G
P2=outlet press kg/cm² G
Steam

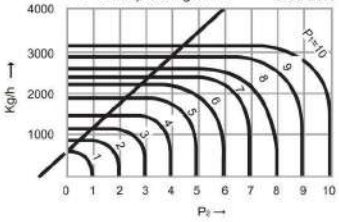

SUS-50
P1=inlet press kg/cm² G
P2=outlet press kg/cm² G
Steam

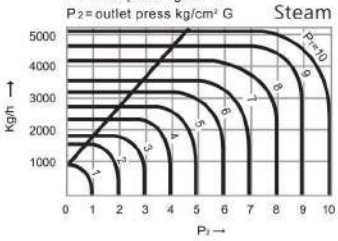

UD-6.8.10.NO
Water

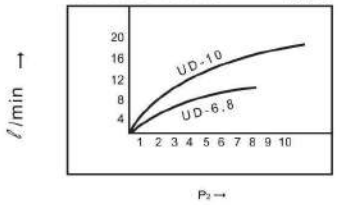

SUS-6.8.10.NO
Water

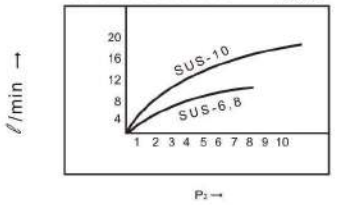

SUS-15-50
Water

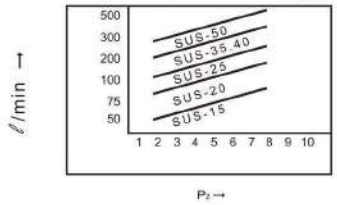

SUS-6.6H
Air

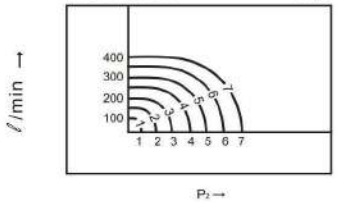

SUS-8.8H
Air

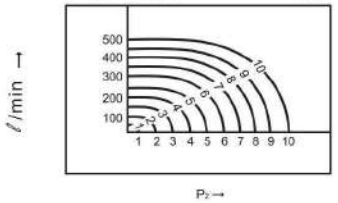

SUS-10.10H
Air

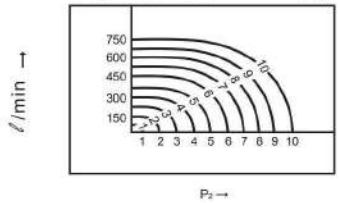

SUS-15/PKS-15/SKS-15
P1=inlet press kg/cm² G
P2=outlet press kg/cm² G
Air

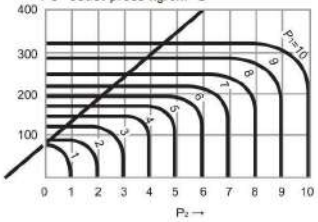

SUS-20/PKS-20/SKS-20
P1=inlet press kg/cm² G
P2=outlet press kg/cm² G
Air

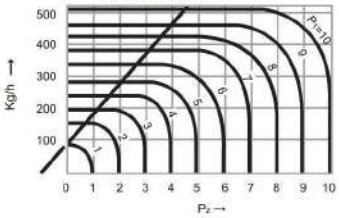

SUS-25/PKS-25/SKS-25
P1=inlet press kg/cm² G
P2=outlet press kg/cm² G
Air

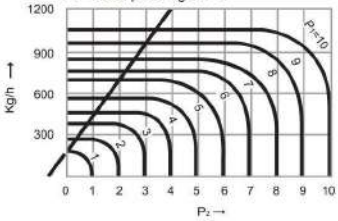

SUS-35
P1=inlet press kg/cm² G
P2=outlet press kg/cm² G
Air

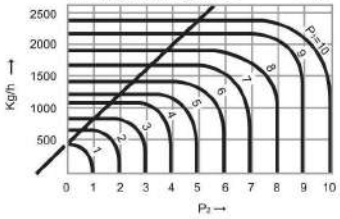

SUS-40
P1=inlet press kg/cm² G
P2=outlet press kg/cm² G
Air

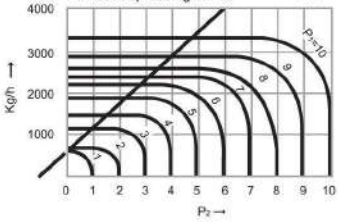

SUS-50
P1=inlet press kg/cm² G
P2=outlet press kg/cm² G
Air

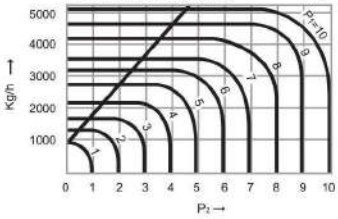

● Steam/Air P1=Inlet press kg/cm² Steam/Air P2=Outlet press kg/cm² Water : Diff. press kg/cm²

Flow Rate Table . 2

US-15
P1=inlet press kg/cm² G
P2=outlet press kg/cm² G
Steam

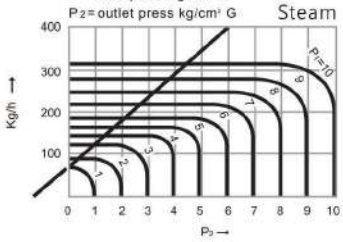

US-20
P1=inlet press kg/cm² G
P2=outlet press kg/cm² G
Steam

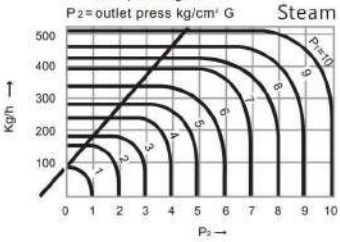

US-25
P1=inlet press kg/cm² G
P2=outlet press kg/cm² G
Steam

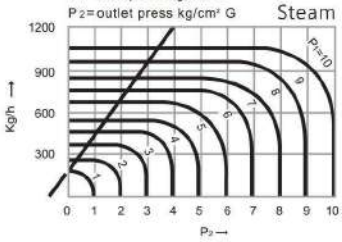

US-35
P1=inlet press kg/cm² G
P2=outlet press kg/cm² G
Steam

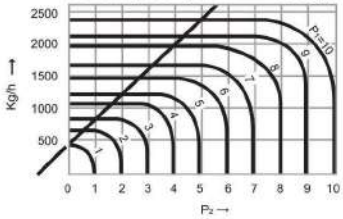

US-40
P1=inlet press kg/cm² G
P2=outlet press kg/cm² G
Steam

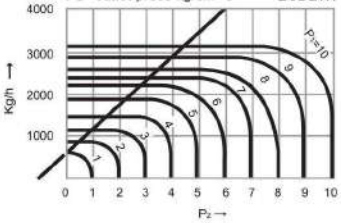

US-50
P1=inlet press kg/cm² G
P2=outlet press kg/cm² G
Steam

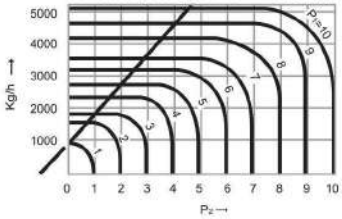

UW-10-50 Water

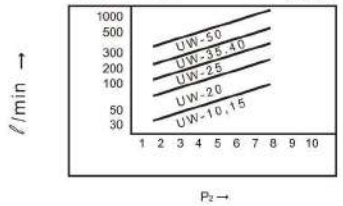

UD-6.8.10.NO Water

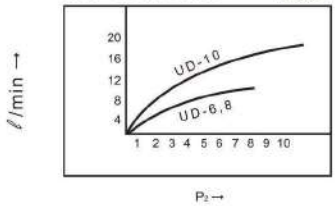

SUS-6.8.10.NO Water

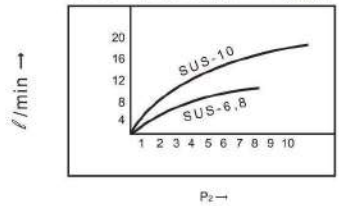

UD-6.6H Air

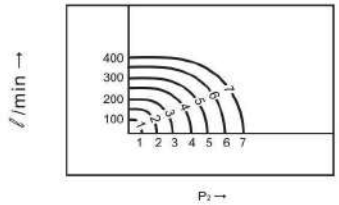

UD-8.8H Air

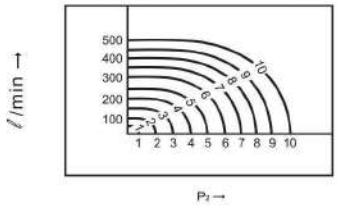

UD-10.10H Air

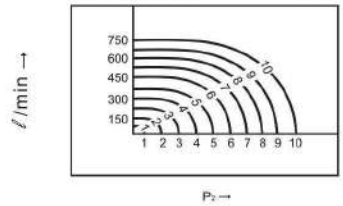

UAW-15
P1=inlet press kg/cm² G
P2=outlet press kg/cm² G
Air

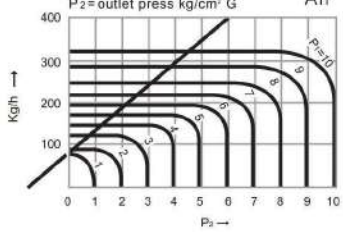

UAW-20
P1=inlet press kg/cm² G
P2=outlet press kg/cm² G
Air

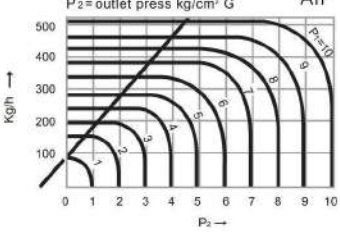

UAW-25
P1=inlet press kg/cm² G
P2=outlet press kg/cm² G
Air

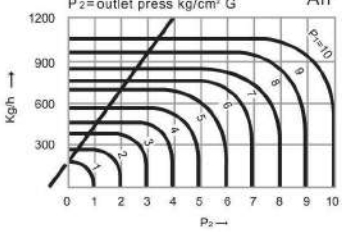

UAW-35
P1=inlet press kg/cm² G
P2=outlet press kg/cm² G
Air

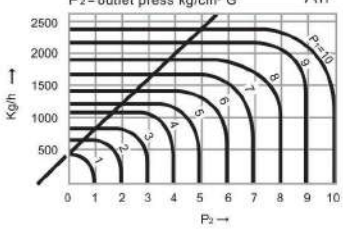

UAW-40
P1=inlet press kg/cm² G
P2=outlet press kg/cm² G
Air

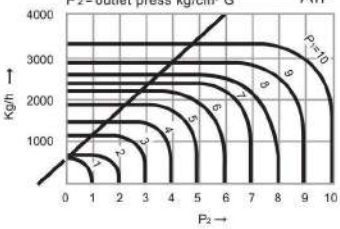

UAW-50
P1=inlet press kg/cm² G
P2=outlet press kg/cm² G
Air

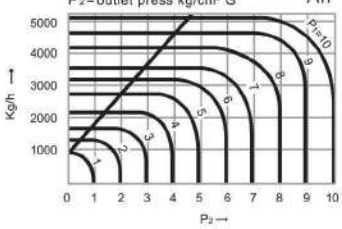

● Steam/Air P1=Inlet press kg/cm² Steam/Air P2=Outlet press kg/cm² Water : Diff. press kg/cm²

Flow Rate Table . 3

US-35F
P1=inlet press kg/cm² G
P2=outlet press kg/cm² G
Steam

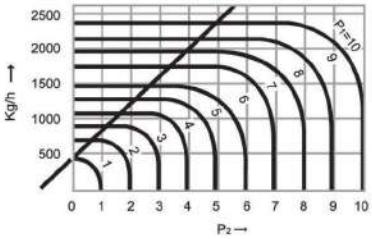

US-40F
P1=inlet press kg/cm² G
P2=outlet press kg/cm² G
Steam

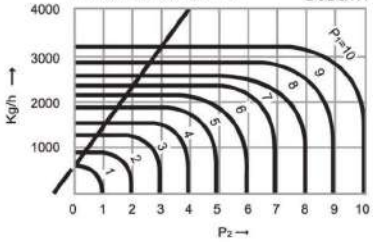

US-50F
P1=inlet press kg/cm² G
P2=outlet press kg/cm² G
Steam

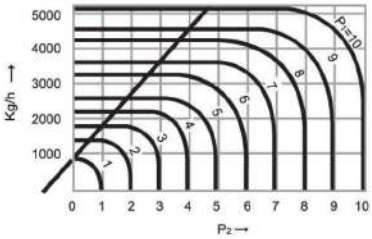

US-65F
P1=inlet press kg/cm² G
P2=outlet press kg/cm² G
Steam

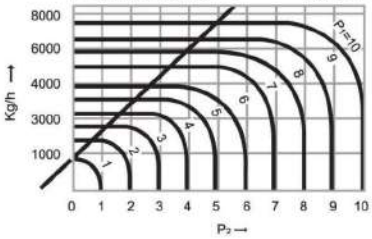

US-80F
P1=inlet press kg/cm² G
P2=outlet press kg/cm² G
Steam

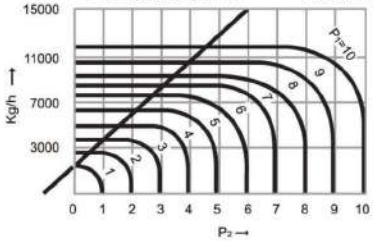

US-100F
P1=inlet press kg/cm² G
P2=outlet press kg/cm² G
Steam

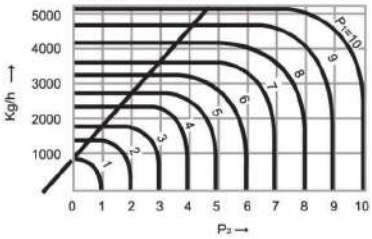

UW-10-25NO Air

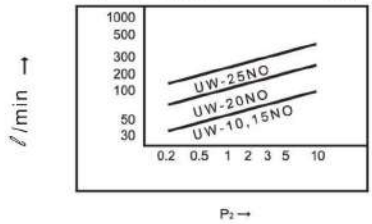

UA-8.10 Air

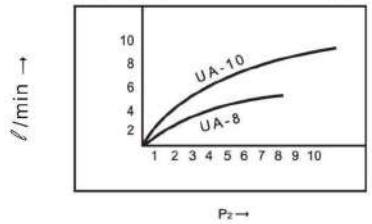

UAO-8.10,15 Air

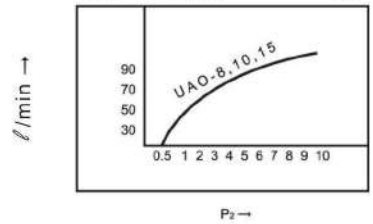

UDC-8,10.15 Air

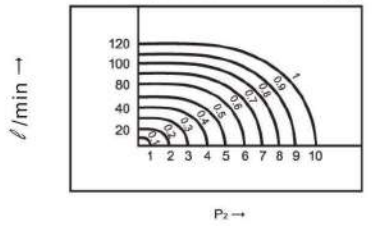

SUS-15,20,25 Air

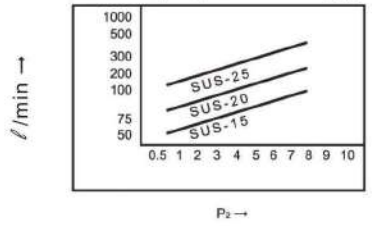

UW-35F,40F Air

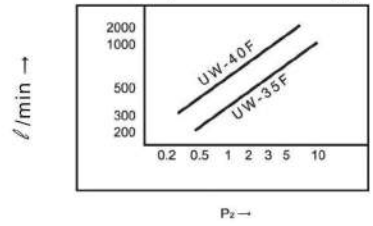

UW-50F,65F Air

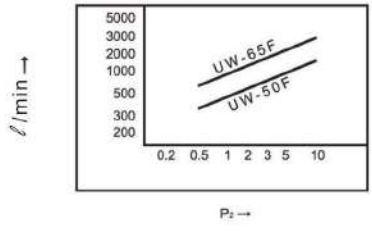

UW-80F,100F Air

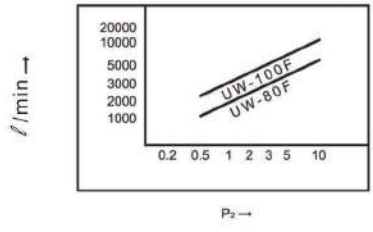

PKW-15~25
SKW-15~25 Air

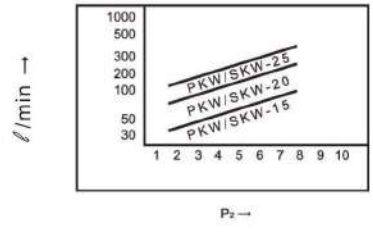

● Steam/Air P1=Inlet press kg/cm² Steam/Air P2=Outlet press kg/cm² Water : Diff. press kg/cm²